MINISTRY OF EDUCATION AND SCIENCE OF UKRAINE
NATIONAL TECHNICAL UNIVERSITY OF UKRAINE
«IGOR SIKORSKY KYIV POLYTECHNIC INSTITUTE»
Faculty of Electrical Power Engineering and Automatics

Ju. V. Peretyatko, L. Y. Spinul

THEORETICAL FUNDAMENTALS of ELECTRICAL ENGINEERING

LINEAR NETWORK THEORY

Recommended by the Methodological Board
Igor Sikorsky Kiev Polytechnic Institute
as a tutorial for bachelor's degree programs for specialty
"141 Electricity, Electrical engineering and Electromechanics"

Kyiv
Igor Sikorsky Kyiv Polytechnic Institute
2019

Editor *Kuliesnova Svetlana St.*, Sen. Lect.
Kudrya Eugene A., Cand. Sc., Assoc. Prof.

The Grief is provided by the Methodological Board
Igor Sikorsky Kyiv Polytechnic Institute (Minutes No 8 of 25.04.2019 p.)

Electronic online educational edition

Ju. V. Peretyatko, Cand. Sc., Assoc. Prof., *L. Y. Spinul*, Cand. Sc., Assoc. Prof.

THEORETICAL FUNDAMENTALS of ELECTRICAL ENGINEERING

LINEAR NETWORK THEORY

Theoretical fundamentals of electrical engineering: Linear network theory [Electronic resource]: tutorial for bachelor's degree programs for specialty "141 Electricity, electrical engineering and electromechanics" / Ju. V. Peretyatko, L. Y. Spinul; Igor Sikorsky Kyiv Polytechnic Institute. – Electronic text data (1 file: 5,16 MB). – Kyiv: Igor Sikorsky Kiev Polytechnic Institute, 2019. – 44 p.

The educational publication "Theoretical fundamentals of electrical engineering: Linear network theory" is intended for applicants for the bachelor's degree in specialty 141 "Electricity, electrical engineering and electromechanics".

Creation international groups in the Igor Sikorsky Kyiv Polytechnic Institute and expansion communications demands both the deep knowledge of specialty and fluently knowledge of technical English from electrical engineer.

This educational publication covers one part of Theoretical fundamentals of electrical engineering named ‘Linear network theory’. It includes short theory and examples to every topic of the part.

© A Ju. V. Peretyatko, L. Y. Spinul, 2019
© Igor Sikorsky Kyiv Polytechnic Institute, 2019

CONTENT

INTRODUCTION…… 4

1. BASIC DEFINITIONS OF ELECTRICAL DC CIRCUITS……..… 5
2. BASIC CONCEPTS OF NETWORK TOPOLOGY……..… 10
3. BASIC LAWS FOR ELECTRICAL CIRCUITS…….. 11
4. COMBINATIONS IN ELECTRICAL CIRCUITS……... 16
   - 4.1. Series Combinations of Resistances…… 16
   - 4.2. Parallel Combinations of Resistances……..…… 17
5. ELECTRIC POTENTIAL AND POTENTIAL DIAGRAM……. 19
6. METHODS OF ANALISYS OF ELECTRIC CIRCUIT…….. 24
   - 6.1. The Method of Direct Application of Kirchhoff's Laws……. 24
   - 6.2. Mesh Method of Circuit Calculation (Maxwell's Method)…. 27
   - 6.3. The Node-analysis Method…….. 30
   - 6.4. Nodal Pairs or the Method of Two nodes……... 34
   - 6.5. The Method of Direct Application of Ohm's law (the method of equivalent transformations) and Star-Delta Transformation…… 35
   - 6.6. The Superposition Theorem…… 38
   - 6.7. Thevenin's Theorem or equivalent generator Method……. 40

LITERATURE…….. 44

INTRODUCTION

When beginning to explore the world of electricity, it is vital to start by understanding the basics of voltage, current, and resistance. These are the three basic building blocks required to manipulate and utilize electricity. At first, these concepts can be difficult to understand because we cannot “see” them. We must use measurement tools such as multimeters, spectrum analyzers, and oscilloscopes to visualize what is happening with the charge in a system.

Fear not, however, this tutorial will give you the basic understanding of voltage, current, and resistance and how the three relate to each other…

We will study how each of the circuit elements behaves individually and how, when they are interconnected, their interaction is governed by circuit laws.

1. BASIC DEFINITIONS OF ELECTRICAL DC CIRCUITS

The ***electrical circuit*** is a set of devices connected together and intended for transfer, distribution and mutual transformation of electrical and other kinds of energy if the processes proceeding in devices can be described by means of concepts of electromotive force, a current and a voltage.

The electrical circuit generally consists of ***active*** electric elements such as sources, ***passive*** electric elements such as resistances, inductances and capacitances and the wires connecting them, forming closed ways for passage of a current.

There are three basic factors which characterizes the operation of all electrical dc circuits: potential, voltage, current and resistance.

Potential is the amount of work needed to move a unit positive charge from a reference point to a specific point inside the field without producing any acceleration.

Voltage is the work required per unit charge. Hence, the voltage is the potential difference between two points

$$U = \varphi_1 - \varphi_2 .$$

It is represented in formulas with letter *U*. The unit of voltage is volt (V). The scientific definition of volt is the work necessary to force 1 ampere of current to flow through the resistance of 1 ohm.

Current is the rate of movement of electrical charges. The electric current is the time rate of charge passing through a specified area $i = \frac{dq}{dt}$. It is represented in formulas with letter *I*. The unit of current is ampere (A) in the international system.

DC = Direct Current – current flows in one direction.

A movement direction of the DC is indicated by an arrow through a part of an electrical circuit (Fig.1, a).

In any electric circuit the current flows from "+" side to the "-" side of the source.

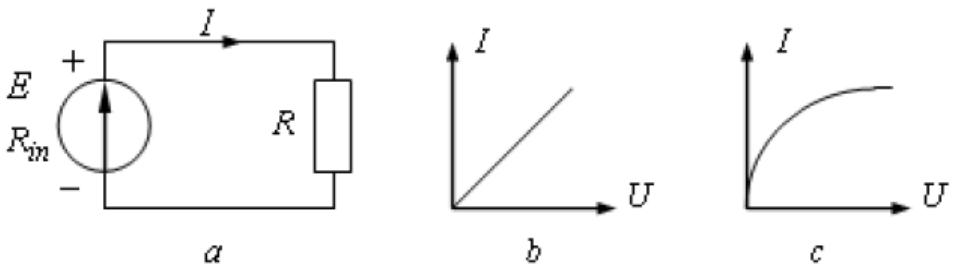

Fig. 1.1

A graphic representation of an electric circuit is called a ***circuit diagram*** (Fig. 1.1, a).

The main characteristic of any element or electrical circuit is the current-voltage characteristic (V/A) which is the relationship between the current through the element and the voltage on its terminals. There are two different types of volt-ampere (V/A) characteristics. One is a straight line; the other is a curve. Both are shown in Fig. 2.1, b and c, respectively.

DC passive electric element. ***Resistor*** is a circuit element in which an irreversible conversion of electrical energy into heat energy takes place, when a current flows through it.

Resistive elements for which the volt-ampere characteristic is a straight line are called *linear*, and the electric circuits containing only linear resistances are called *linear circuits*. Resistive elements for which the volt-ampere characteristic is other than a straight line are called *non-linear*, and so the electric circuits containing them are called *non-linear circuits*.

Resistance is the parameter of the linear resistive element which equals to the ratio of voltage across its terminals to the current passing through it – $R = \frac{U}{I}$. Resistance is a fine term for direct-current circuit only. In formulas it is represented by symbol *R*. Resistance is measured in ohms, and ohms are represented by Greek capital letter omega (Ω).

The reciprocal value of the DC resistance is conductance, which is measured in Siemens (S) and determined as $G = 1/R$.

We represent resistors by rectangles.

DC active electric elements. To obtain the mathematical models of real energy sources, the main provisions of ideal source of electromotive force (EMF) and current are introduced.

An ***ideal source of electromotive force*** is a source of electric energy which provides unchanged value of the potential difference across its output terminals. The source internal resistance is equal to zero, namely the output voltage is independent of the current across the source.

An ***ideal source of current*** is such an electric energy source that provides output current with constant value. Its internal resistance is equal to infinity therefore the output voltage is dependent of the value load resistance.

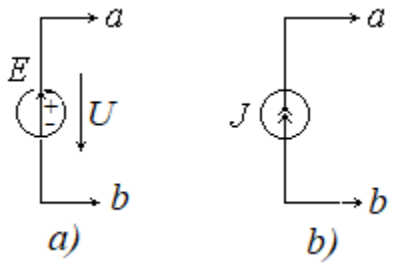

Fig. 1.2.

Fig. 1.2 schematically shows the symbol notations of ideal source of EMF (Fig. 1.2, *a*) and ideal source of current (Fig. 1.2, *b*). Both of these sources are active two-terminal elements.

In the diagram (Fig. 1.2, *a*) EMF source is depicted by the circle with the arrow inside and/or + and – sings that indicate the polarity and the positive direction of the EMF.

The magnitude of the current in an electrical circuit connected up to an EMF source depends on the parameters of this circuit and on *E*. If terminals of the ideal EMF source are short circuited, then the current rises to infinite value.

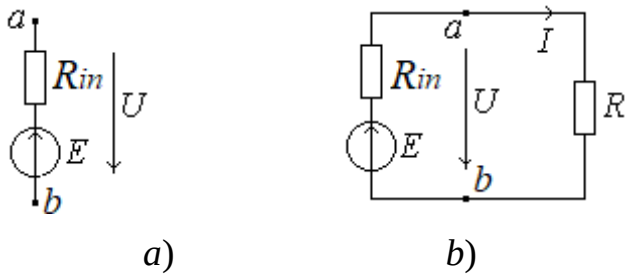

Fig. 1.3

A circuit diagram of a physical source of electrical energy may be represented as an EMF source connected in series with an internal resistor (Fig. 1.3, *a*).

The volt-ampere characteristics of the ideal voltage source and physical source are presented on Fig. 1.4 *a*,*b* respectively.

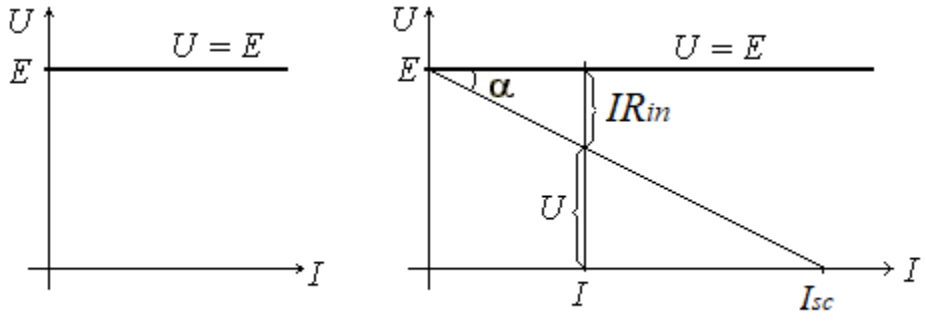

a) *b*)

Fig. 1.4

A physical source of electrical energy which operates under a load is represented in Fig. 1.3*b*. If the load is increased, the current through it is reduced. The electrical state of this circuit is described by the linear algebraic equation

$$U = E - IR_{in},$$

where $U = IR_{load}$ is the voltage drop across load resistance;

$U_{in} = IR_{in}$ is the voltage drop across internal resistance of a physical source of electrical energy;

E is the EMF source.

After transformation we obtain the current passing through all elements of this circuit

$$I = \frac{E}{R_{in} + R_{load}}.$$

In the diagram (Fig. 1.2, *b*) a current source is depicted by the circle with the arrow inside or/and + and – sings which indicates the positive direction of the current *J*.

A circuit diagram of a physical current source may be represented as a current source connected in parallel with an internal resistor (Fig. 1.5).

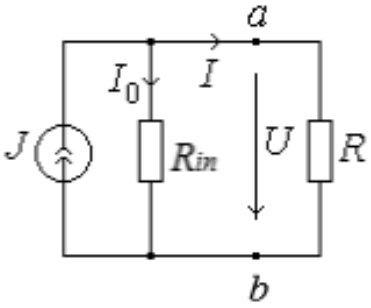

Fig. 1.5

For a physical current source the mathematical model is described by the equation:

$$I = \frac{E}{R_{in}} = \frac{U}{R_{in}}.$$

Both circuits of these physical sources of electric energy (Fig. 1.5) are equivalent (they have the same volt-ampere characteristic) from the point of view of currents, voltages and powers in external parts of any electric circuit. Therefore, in the course of calculations it is possible to replace any real EMF source with a real current source (Fig 1.6), and on the contrary, using a parity

$$R_0 = \frac{E}{J} = \frac{U_{oc}}{I_{sc}},$$

where $U_{i.v.}$ is an open circuit voltage,

$I_{s.c.}$ is a short circuit current.

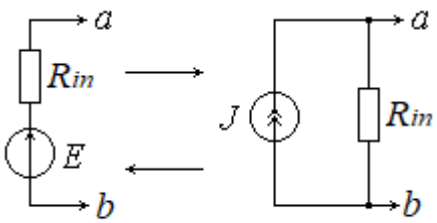

Fig. 1.6

2. BASIC CONCEPTS OF NETWORK TOPOLOGY

Since the elements of an electric circuit can be interconnected in several ways, we need to understand some basic concepts of network topology. To differentiate between a circuit and a network, we may regard a network as an interconnection of elements or devices, whereas a circuit is a network providing one or more closed paths. In network topology, we study the properties relating to the placement of elements in the network and the geometric configuration of the network. It's all about circuit elements such as branches, nodes, and loops.

A ***branch*** is formed of one or several circuit elements connected in series**.**

A ***node*** is the point of connection between three or more branches. Node is indicated by dot sign.

A ***loop*** is any closed path in a circuit. A loop is said to be independent if it contains at least one branch which is not a part of any other independent loop.

A ***mesh*** is a loop that has no other loops inside it.

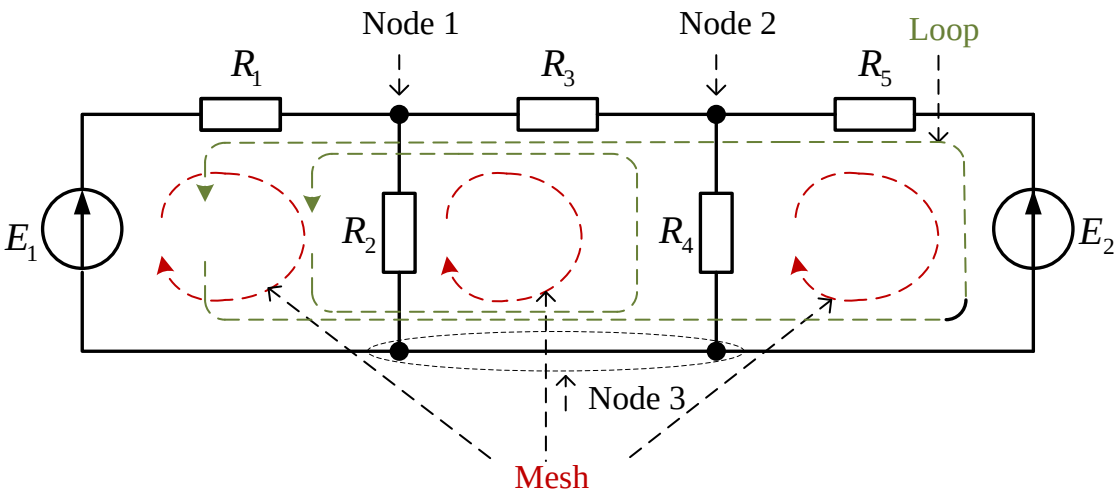

Fig. 2.1

3. BASIC LAWS FOR ELECTRICAL CIRCUITS

Ohm's Law for linear circuit states the relation between the voltage across the elements' terminals of some branch or one element and the current through all the elements of this branch or through one element.

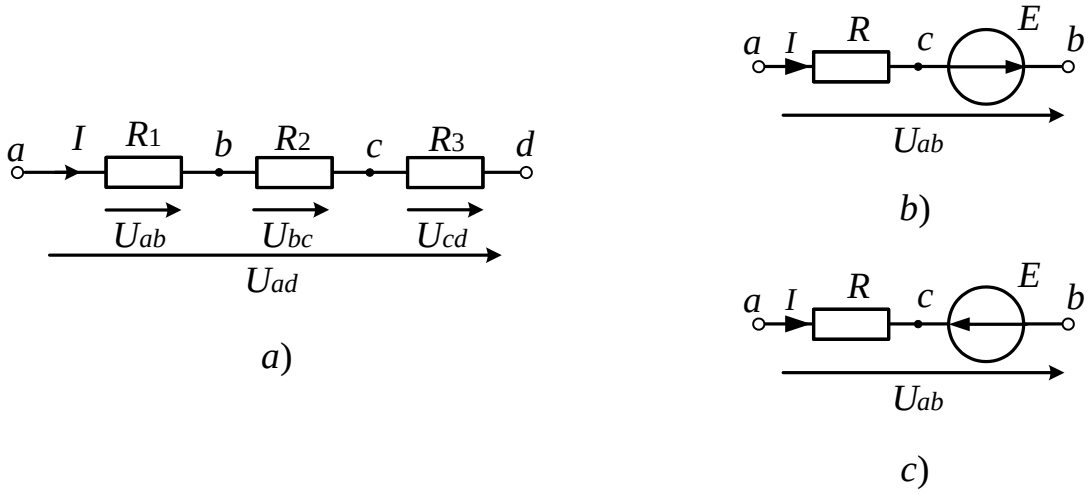

Fig. 3.1

If the current flows through the resistor or the resistors connected in series (Fig. 3.1, a) the potential of terminal *a*, at which the current enters, is higher than the potential of terminal *d*, from which it flows out. The potential difference between terminals *a* and *d*, i.e. the voltage drop, is expressed by the formula

$$U_{ad} = \varphi_a - \varphi_d = U_{ab} + U_{bc} + U_{cd} = IR_1 + IR_2 + IR_3 = I\left(R_1 + R_2 + R_3\right).$$

From here

$$I = \frac{U_{ab}}{R_1} = \frac{\varphi_a - \varphi_b}{R_1} \quad \text{or} \quad I = U_{ab}G_1 = \left(\varphi_a - \varphi_b\right)G_1.$$

Ohm's Law can be applied (rewritten) for the branch containing an EMF source (Fig. 3.1,*b* and *c*). The mathematical expression for this case is

Fig. 3.1,*b*: $$U_{ab} = \varphi_a - \varphi_b = IR - E \quad \Rightarrow \quad I = \frac{\varphi_a - \varphi_b + E}{R} = \frac{U_{ab} + E}{R};$$

Fig. 3.1,*c*: $$U_{ab} = \varphi_a - \varphi_b = IR + E \quad \Rightarrow \quad I = \frac{\varphi_a - \varphi_b - E}{R} = \frac{U_{ab} - E}{R}.$$

In the general case

$$I = \frac{U_{ab} \pm \sum E_k}{\sum R_k}.$$

The “plus” sign before *E* applies to the case of Fig. 3.1,*b* and “minus” sign – to the case in Fig. 3.1,*c*.

Kirchhoff’s Current Law. The sum of the currents flowing into a junction is equal to the sum of the currents flowing out, i.e. the algebraic sum of the currents at the node is zero $\sum_{k=1}^{n} I_k = 0$.

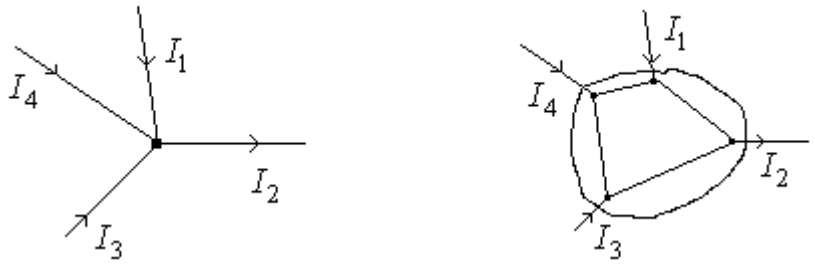

Fig. 3.2

$$I_1 + (-I_2) + I_3 + I_4 = 0.$$

Since currents I_1, I_3, I_4 are entering the node, while current I_2 is leaving it, by rearranging the terms we get $I_1 + I_3 + I_4 = I_2$ or $I_1 + I_3 + I_4 - I_2 = 0$. This equation is an alternative form of Kirchhoff’s Current Law. The sum of the currents entering a node is equal to the sum of the currents leaving it.

Kirchhoff's Voltage Law. The algebraic sum of the voltages of all the elements around any closed loop is zero

$$\sum_{k=1}^{m} U_k = 0.$$

An alternative form of Kirchhoff’s voltage Law: the algebraic sum of the voltages of resistors in the closed path equals the algebraic sum of the EMF in it

$$\sum_{k=1}^{n} I_k R_k = \sum_{k=1}^{m} E_k.$$

The terms enter the respective sum with the "plus" sign, if they are in the direction of summation round the circuit, and with the "minus" sign, if they are in the opposite direction.

For example, for the closed circuit shown in Fig. 3.3 we have

$$U_{12} + U_{23} + U_{31} = 0$$

or: $I_1R_1 + I_2R_2 - I_3R_3 = E_4 - E_5 + E_6$

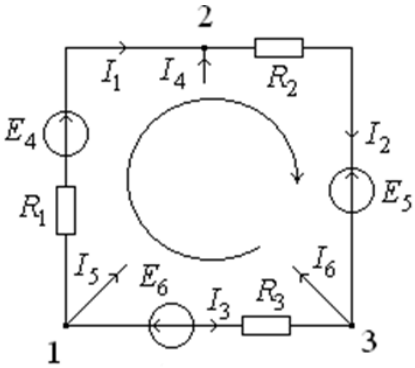

Fig. 3.3

Energy relation in electric direct current circuit. Let's consider a simple circuit in which an energy source (of voltage *E* or current *J*) causes a current *I* to flow through a resistor of resistance *R*. As we have seen, the energy source is continuously doing work by raising the potentials of charges which flow into its negative terminal and then flow out of its positive terminal. How much work does the energy source do per unit time? In other words, what is the power output of the energy source?

Power (*P*) is exactly equal to current (*I*) multiplied by voltage (*U*), rather than merely being proportional to *IU*

$$P = IU.$$

This rule does not just apply to the sources of energy. If a current *I* flows through some component of a DC circuit which has a voltage drop *U* in the direction of current flowing then that component obtains the energy per unit time *IU*. The SI unit of power is the watt (W), it follows that

$$1\text{W}=1\text{V}\cdot 1\text{A}.$$

Let's consider a resistor *R* which carries a current *I*. According to Ohm's law, the voltage drop across the resistor is $U=I\cdot R$. Thus, the energy obtained by the resistor per unit time is

$$P_R = U_R I_R = I_R{}^2 R = \frac{U_R{}^2}{R}.$$

According to the law of conservation of energy, the total energy of an isolated system remains constant. It is said to be conserved over time. This law means that energy can neither be created nor destroyed. It can only be transformed from one form to another.

If the law of conservation of energy is considered per unit time, the equation of energy balance transforms into the balance of the powers: **the algebraic sum of all powers which are produced by electric energy sources in a circuit is equal the total sum of the powers which the load converts into other forms of energy.**

The energy balance equation is:

$$\boxed{\underbrace{\underbrace{\pm\sum E_k I_k}_{\substack{Power\ of\ voltage\\ sources}} \quad \underbrace{\pm\sum U_{Jk} J_k}_{\substack{Power\ of\ current\\ sources}}}_{Algebraic\ sum} = \underbrace{\underbrace{\sum I_k^2 R_k}_{\substack{Power\\ of\ loads}}}_{Arithmetic\ sum}}.$$

where $\sum E_k I_k$ is the power which *each* EMF sources develops;

$\sum U_{Jk} J_k$ is the power which *each* current source develops, U_{Jk} is the voltage across the terminals of current source;

$\sum I_k^2 R_k$ is the power which is (diffused) by each load resistances.

The power which is converted in the load $I_k^2 R_k$, can accept only positive values as a load (resistance devices) always consumes electrical energy. The expressions of the power of the voltage sources $P_{E_k} = E_k I_k$ and current sources $P_{J_k} = U_{Jk} J_k$ may be both positive (sources are energy generator) and negative (sources are energy consumer).

If the current direction is the same as the EMF of this branch then the voltage source works like the energy generator and the power of this source is calculated as $P_{E_k} = +E_k I_k$. If the current direction is the opposite to the EMF of this

branch then the voltage source works like the energy consumer and the power of this source is calculated as $P_{E_k} = -E_k I_k$.

As for the current source, if directions both of the current source and the voltage across it are the opposite, then this source works like the energy generator and the its power is calculated as $P_{J_k} = +U_k J_k$. In other case it works like the energy consumer and the power is calculated as $P_{J_k} = -U_k J_k$.

4. COMBINATIONS IN ELECTRICAL CIRCUITS

4.1. Series Combinations of Resistances

Very often in circuit analysis it is necessary to deal with several elements in a closed-loop circuit.

Series connection is such a connection of elements in electric circuit between two nodes. Any series connection can include the arbitrary number of resistors and voltage sources. The same current flows through all the elements when they are connected in series. The circuit elements are connected in series in Fig. 4.1, *a* .

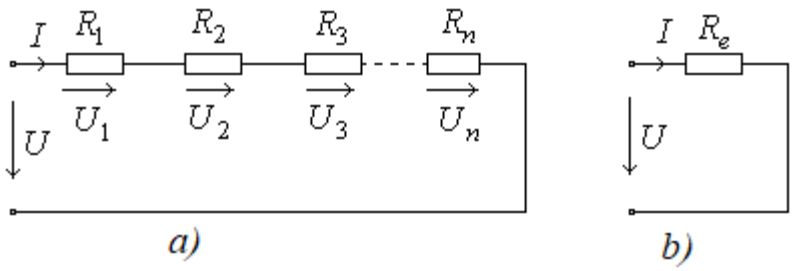

Fig. 4.1

Applying Kirchhoff's voltage law, for the circuit of Fig. 4.1, *a* reveals a simple rule for handling resistances in series.

$$U = U_1 + U_2 + U_3 + ... + U_n \ .$$

As a result

$$IR_e = IR_1 + IR_2 + IR_3 + ... + IR_n \ .$$

$IR_e = I\left(R_1 + R_2 + R_3 + ... + R_n\right)$, from where follows $R_e = R_1 + R_2 + R_3 + ... + R_n$.

Consequently, the resistors connected in series may be replaced by one equivalent resistor as shown in Fig. 4.1, b, where R_e denotes the *equivalent series resistance* of the circuit.

In general, if there are *n* series-connected resistances in a circuit, the equivalent series resistance is the sum of the individual resistances. Expressed mathematically, we have

$$R_{eq} = R_1 + R_2 + R_3 + ... + R_n \text{ or } R_e = \sum_{k=1}^{n} R_k .$$

Similarly we can simplify the connection of the voltage sources and the resistors connected in series (Fig. 4.2).

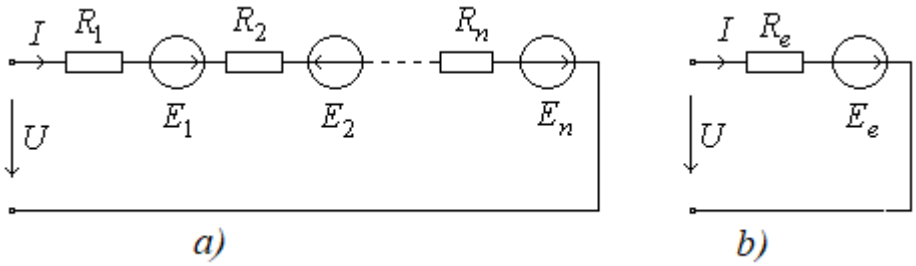

Fig. 4.2

Here $E_e = \sum_{k=1}^{n} \pm E_k$ – the algebraic sum of the EMF; $R_e = \sum_{k=1}^{n} R_k$ – the arithmetic sum of the resistances.

4.2. Parallel Combinations of Resistances

Parallel connection is such a connection of elements in electric circuit in which all elements are connected between two nodes (Fig. 4.3, *a* and *b*).

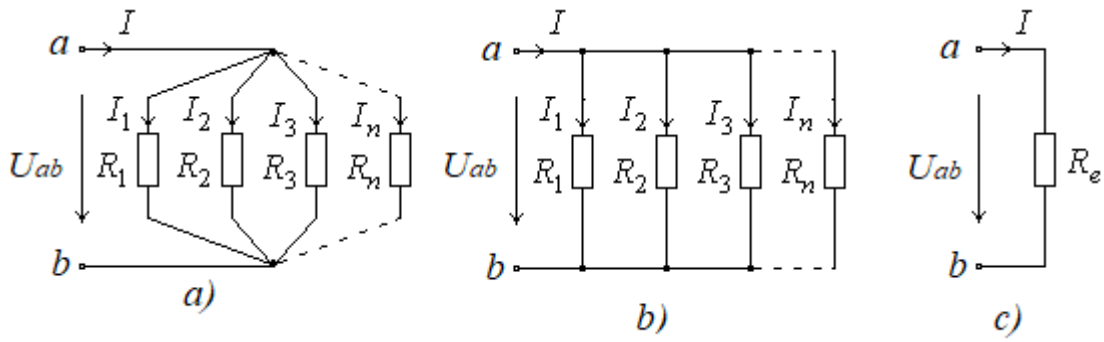

Fig. 4.3

When several resistors have two terminals connected together, with nothing intervening, they are connected in parallel. The voltage drop when you go from node ***a*** to node ***b*** is the same and no matter which way you go through the circuit. Thus, resistors in parallel have the same voltage drop. According to Kirchhoff's Current Law we can write the equation

$$I = I_1 + I_2 + I_3 + ... + I_n$$

or

$$\frac{U}{R_e} = \frac{U}{R_1} + \frac{U}{R_2} + \frac{U}{R_3} + \cdots + \frac{U}{R_n}.$$

Consequently, the resistors connected in parallel may be replaced by one equivalent resistor (Fig. 4.3, ***c***) whose resistance is given by

$$\frac{1}{R_e} = \frac{1}{R_1} + \frac{1}{R_2} + \frac{1}{R_3} + \cdots + \frac{1}{R_n}.$$

In general case $\frac{1}{R_e} = \sum_{k=1}^{n} \frac{1}{R_k}$.

If there are n parallel-connected resistances in a circuit, we find the equivalent conductance by taking the sum of the individual conductances. Mathematical expression is the following

$$G_e = G_1 + G_2 + G_3 + ... + G_n.$$

Similarly we represent the replacement for parallel connection of the current sources and the resistors (Fig. 4.4)

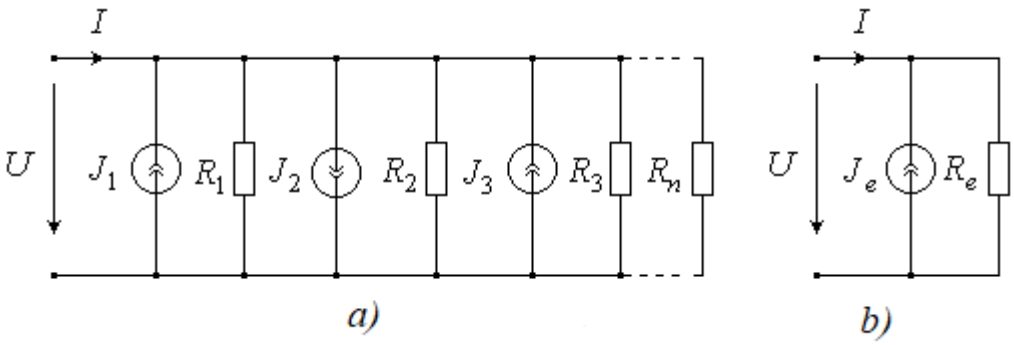

Fig. 4.4

where $J_e = \sum_{k=1}^{n} \pm J_k$ – the algebraic sum of the currents;

$\frac{1}{R_e} = \sum_{k=1}^{n} \frac{1}{R_k}$ – the equivalent resistor.

5. ELECTRIC POTENTIAL AND POTENTIAL DIAGRAM

An **electric potential** is the amount of work needed to move a unit positive charge from a reference point to a specific point inside the field without producing any acceleration. Typically, the reference point is Earth or a point at Infinity, although any point beyond the influence of the electric field charge can be used. As a result the electric potential of any point of the electrical circuit can be set as zero.

According to classical electrostatics, electric potential is a scalar quantity denoted by *V* or occasionally φ, equal to the electric potential energy of any charged particle at any location (measured in joules) divided by the charge of that particle (measured in coulombs).

The voltage between two points is equal the difference of the potentials of these points. It is not independent on the movement way from one point to another.

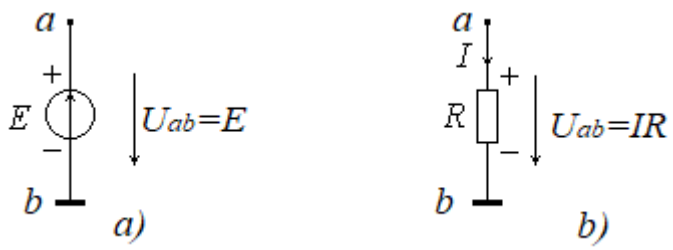

Fig. 5.1

The ideal voltage source is shown in Fig. 5.1, *a* and the resistor with current flowing through it is in Fig. 5.1, *b*. Suppose that the potential of the point *b* is zero $\varphi_b = 0$. For the ideal voltage source the potential of point *a* is higher/more than the potential of point *b* by the EMF *E*. The voltage drop U_{ab} across the EMF is $U_{ab} = \varphi_a - \varphi_b = E$. In other words, if we move across EMF from «-» to «+», then the potential increases to the EMF value. The voltage is positive if we move across EMF from «+» to «-» (oppositely to the direction of the arrow).

We use the same reasoning like to show above for the resistor with current (Fig. 5.1, *b*). For Fig. 5.1, *b* we assign the potential of point ***b*** as zero φ_b. According to the theory the current flows from the point with higher potential to the point with less potential. As a result the potential of point ***a*** is higher than the potential of point ***b*** by the drop voltage value (*IR*) of the resistor *R*, $\varphi_a = IR$. The drop voltage between points ***a*** and ***b*** is $U_{ab} = \varphi_a - \varphi_b = \varphi_a = IR$. Obviously the drop voltage between points ***b*** and ***a*** is $U_{ba} = \varphi_b - \varphi_a$ and is negative.

Conclusion: *the potential increases by the drop voltage value (IR) across the part of the circuit with resistor R when the direction is opposite to the current flowing through this R.*

The part of the electrical circuit with EMFs and resistors between points ***a*** and ***b*** are shown in Fig. 5.2. Current *I* flows through all these elements.

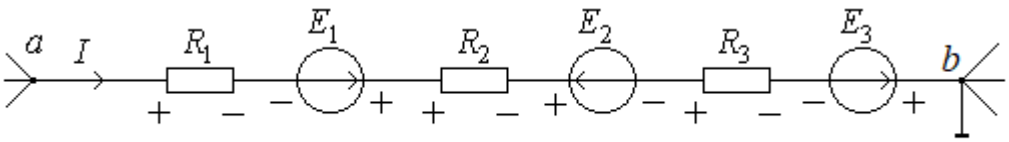

Fig. 5.2

Let's find the potential of point *a* if the potential of point b is zero, in other words the voltage between points ***a*** and ***b***:

$$\varphi_a = \varphi_b - E_3 + IR_3 + E_2 + IR_2 - E_1 + IR_1 = \varphi_b - E_3 + E_2 - E_1 + I(R_1 + R_2 + R_3)$$

or

$$\varphi_a - \varphi_b = U_{ab} = -E_3 + E_2 - E_1 + I(R_1 + R_2 + R_3)\ ;$$

then

$$I = \frac{\varphi_a - \varphi_б + E_3 - E_2 + E_1}{R_1 + R_2 + R_3}; \quad I = \frac{U_{ab} + E_3 - E_2 + E_1}{R_1 + R_2 + R_3}.$$

The last formula is Ohm's law. According to this law the current flowing from point *a* to point *b* is the ratio of the voltage across the two points (***a*** and ***b***) to summary resistance between these points.

Ohm's Law for a branch is expressed by the equation $I = \dfrac{U_{ab} + \sum_{k=1}^{m} E_k}{\sum_{k=1}^{n} R_k}$.

The Ohm's law for single-mesh network is $I = \dfrac{\sum_{k=1}^{m} E_k}{\sum_{k=1}^{n} R_k}$.

A **potential diagram** is a dependence of potential distribution along any part of the circuit from the resistance of this part. The resistances are an abscissa; the potentials are an ordinate of the potential diagram. There is a separate point in the potential diagram for each point round a circuit.

The sequence of the construction of a potential diagram:

1) choose any closed mesh with EMF and assume a positive direction along this mesh;

2) mark every point of the contour with letters or numbers; only one element must be between two points;

3) select a point on the mesh and its potential equate to zero (ground);

4) on the abscissa, mark the segments whose lengths correspond to the scale the values of resistance of separate sections of the mesh, observing sequences of the location of these areas in the electric circle;

5) mark the ordinates for the marked end of the sections that are on a scale proportional to the potential of the corresponding points of the electric circuit;

6) connect built points by straight lines.

The selection of a point whose potential is zero does not affect the current distribution in this circuit. This is because no additional path is formed for a current to flow. The situation is different when two or more junctions with different potentials are earthed (or grounded). Some additional paths are formed through earth (or any conducting medium), so the circuit arrangement or configuration changes, and the current distribution becomes different.

If we have an EMF between two points, and its direction coincides with the positive direction along the contour, we take it with a plus sign. In the opposite case its sign will be minus.

If a current through resistor has the same direction as the positive direction along the contour, the voltage drop from this current will have a minus sign. If a current doesn't coincide with the positive direction along the contour, we will take the voltage drop with a plus sign. We must remember that current always flows from the point with a higher potential to the point with a lower one.

Let’s Find currents flowing through all the elements of the single-mesh network (Fig. 5.3, *a*) and draw its potential diagram.

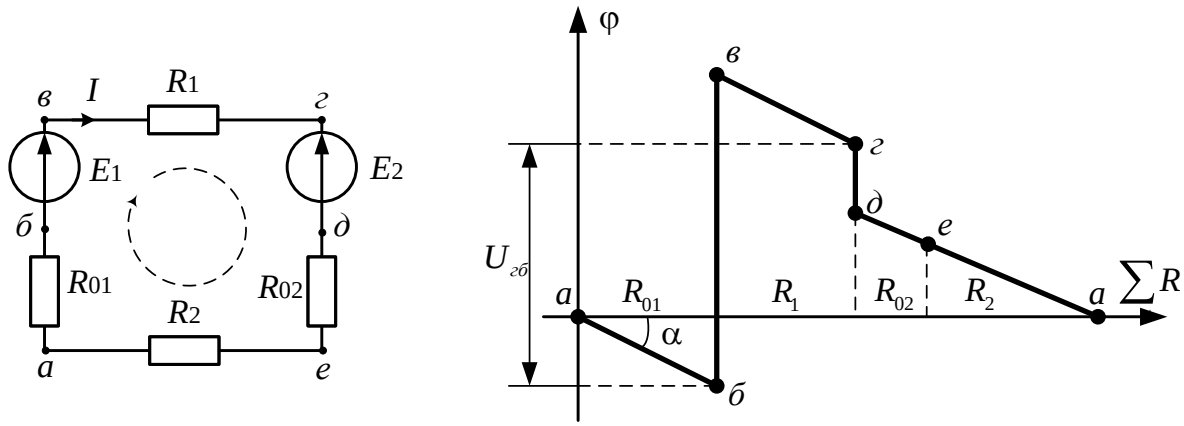

a) *b*)

Fig. 5.3

There are two voltage sources in circuit and let's $E_1 > E_2$. Then according to Ohm’s law $I = \dfrac{E_1 - E_2}{R_1 + R_{01} + R_{02} + R_2}$ and the direction of the current is same as the direction of E_1.

To draw the circuit potential diagram we have to choose any point where the potential is zero. If the potential of point *a* is zero then the potentials of other points are; $\varphi_a = 0$; $\varphi_b = \varphi_a - IR_{01}$; $\varphi_c = \varphi_b + E_1$; $\varphi_d = \varphi_c - IR_1$;

$$\varphi_e = \varphi_d - E_2;\ \varphi_f = \varphi_e - IR_{02};\ \varphi_a = \varphi_f - IR_2.$$

Using calculated points' potentials we can draw the potential diagram (Fig. 5, *b*):

- sum of resistances in order of their location on horizontal axis;

- point potentials on vertical axis.

Using potential diagram you can define:

1) value and direction of current through resistor; tangent of angle of line segment incline that describes change of a potential across resistors is directly proportional to the current through the resistor $\left(i = \frac{m_U}{m_R} tg\alpha \right)$;

2) voltage across any two points.

6. METHODS OF ANALISYS OF ELECTRIC CIRCUIT

There are two types of problem in circuit theory: the problems of analysis and synthesis.

By network *analysis* we understand the calculation of the response of the given network, i.e. the determining of the electrical values or their relationships for the given circuit.

By network *synthesis* we mean the reverse problem; namely, determining an electrical circuit meeting certain prescribed specifications, which are usually given as frequency or time functions.

Unlike analysis problems which, as a rule, have only one solution, problems of synthesis may have a few or many solutions, or none.

This chapter is devoted to general methods of network analysis in steady-state conditions.

6.1. The Method of Direct Application of Kirchhoff's Laws

These two laws enable the Currents and Voltages in a circuit to be found.

Let us suppose that in a network containing k branches and q nodes are given the EMF of voltage sources and resistance of resistors. The number of unknowns, therefore, equals the number of branches.

According to Kirchhoff's current law (q-1) independent equations can be written; the equation for the last q^{th} node is the result of the preceding (q-1) equations. Actually, in view of the fact that each branch connects two nodes, the current of each branch appears twice in the equations written for q nodes. If, therefore, the q equations are added, the result is an identity in the form 0 = 0.

According to Kirchhoff's voltage law (k-q+1) independent equations can be written. This is explained by the fact that if Ohm's law is applied to all the branches, then p equations are obtained.

The basic procedure for using Kirchhoff's Circuit Laws is as follows:

1) label and calculate the number of nodes q and branches k;

2) choose arbitrarily current directions through branches;

3) determine number of circuit meshes and choose arbitrarily positive directions of travers around these meshes;

4) write down (q-1) equations for nodes under Kirchhoff's first law and p-(q-1) equations for meshes under Kirchhoff's second law;

5) find p unknown currents I using system of linear equations. If any current $I < 0$, real current flows the opposite direction.

6) check power balance.

Example 1. Write down the system of linear equations to find all unknown currents for the circuit shown on Fig. 6.1.

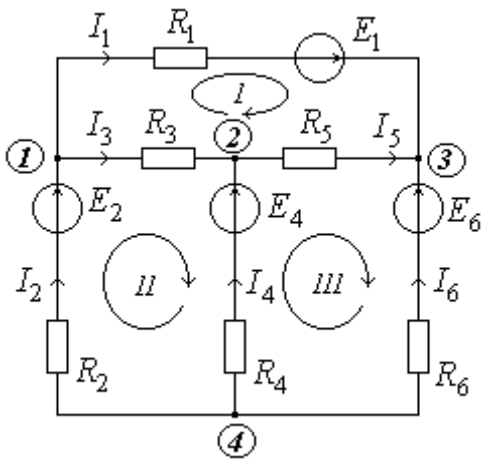

Fig. 6.1

Circuit features:

- number of branches p=6;
- number of nodes q=4, labeled from 1 to 4;
- 3 meshes (inner loops);
- 6 unknown currents $I_1, I_2, I_3, I_4, I_5, I_6$.

First choose the arbitrarily positive directions of the unknown currents and the arbitrarily positive directions of traversal around these meshes, for example like Fig. 6.1.

The amount of equations under Kirchhoff's current law is q-1 as a result we have three equations:

$$1.\ I_2 - I_1 - I_3 = 0;$$
$$2.\ I_3 + I_4 - I_5 = 0;$$
$$3.\ I_1 + I_5 + I_6 = 0.$$

The amount of equations under Kirchhoff's voltage law is the same as the amount of the meshes.

$$\text{I. } I_1R_1 - I_5R_5 - I_3R_3 = E_1;$$
$$\text{II. } I_2R_2 + I_3R_3 - I_4R_4 = E_2 - E_4;$$
$$\text{III. } I_4R_4 + I_5R_5 - I_6R_6 = E_4 - E_6.$$

The system of linear equations consists of 6 equations.

Example 2. Write down the system of linear equations to find all unknown currents for the circuit shown on Fig. 6.2.

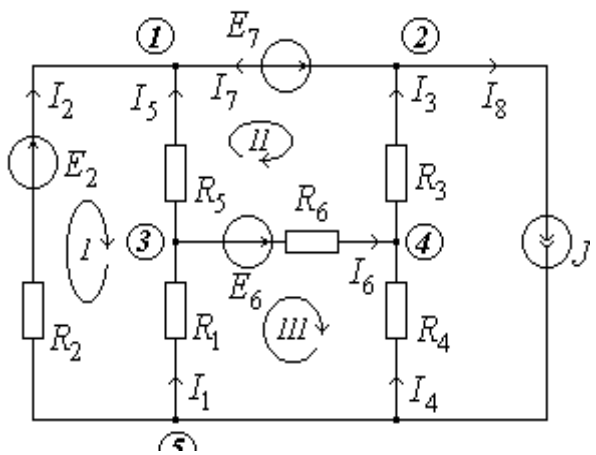

Fig. 6.2

Circuit features:

- branches p=8;
- nodes q=5, labeled from 1 to 4;
- 3 meshes (inner loops);
- 7 unknown currents since $I_8 = J$.

First choose the arbitrarily positive directions of the unknown currents and the arbitrarily positive directions of traversal around these meshes, for example like fig. 6.1.

The amount of equations under Kirchhoff's current law is q-1 as a result 4:

$$1.\ I_2 + I_5 + I_7 = 0; \quad 3.\ I_1 - I_5 - I_6 = 0;$$
$$2.\ I_3 - I_7 - J = 0; \quad 4.\ I_4 - I_3 + I_6 = 0.$$

The amount of equations under Kirchhoff's voltage law is the same as the amount of the meshes or p-(q-1) as a result we have three equations. Since one mesh includes current source then equation for this mesh under Kirchhoff's voltage law isn’t drawn up.

$$\text{I. } I_2R_2 - I_5R_5 - I_1R_1 = E_2,$$
$$\text{II. } I_5R_5 - I_3R_3 - I_6R_6 = E_7 - E_6,$$
$$\text{III. } I_1R_1 + I_6R_6 - I_4R_4 = E_6.$$

for checking results write down power balance:

$$E_2I_2 - E_7I_7 + E_6I_6 + JU_{52} = R_1I_1^2 + R_2I_2^2 + R_3I_3^2 + R_4I_4^2 + R_5I_5^2 + R_6I_6^2.$$

where $U_{52} = R_4I_4 + R_3I_3$.

6.2. Mesh Method of Circuit Calculation (Maxwell's Method)

As well as using **Kirchhoffs Circuit Law** to calculate the various voltages and currents circulating around a linear circuit, we can also use loop analysis to calculate the currents in each independent loop which helps to reduce the amount of equations by using just Kirchhoff's voltage laws. In the tutorial on DC circuits we will consider Mesh Current Analysis to do it.

In other words Mesh method of circuit calculation allows reducing the number of equations to be solved from *p* to the number of independent loops *p*-(*q*+1), where *p*, *q* – the number of branches and nodes in the circuit.

The mesh current method is based on introducing some conditional current in every independent loop, the direction of the conditional current is chosen coinciding with the direction of traversal around the loop.

For each loop, second Kirchhoff's law is applied to write *p*-(*q*-1) equations with respect to mesh current.

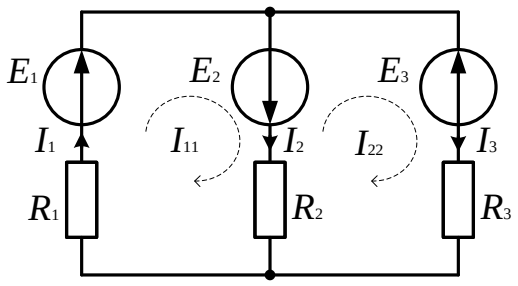

Fig. 6.3

The two-contours circuit shown on fig. 6.3 has three currents I_1, I_2, I_3 which flow through the branches but in such circuit only two mesh-currents I_{11}, I_{22}.

Generally, for example, for any circuit with two contours the simultaneous equations according to the mesh current method can be written as

$$\begin{cases} I_{11}R_{11} + I_{22}R_{12} = E_{11}, \\ I_{11}R_{21} + I_{22}R_{22} = E_{22}, \end{cases}$$

where

$R_{11} = R_1 + R_2$ – is the self-resistance of the first mesh;

$R_{22} = R_2 + R_3$ – is the self-resistance of the second mesh;

$R_{12} = R_{21} = -R_2$ – are is mutual resistances of the first and the second meshes;

$E_{11} = E_1 + E_2$ – is the EMF across the first mesh;

$E_{22} = -E_2 - E_3$ – is the EMF across the second mesh.

We apply Kirchhoff's voltage law to each mesh and write voltage equations for clockwise summation round the meshes and obtain

$$\begin{cases} I_{11}(R_1 + R_2) - I_{22}R_2 = E_1 + E_2, \\ -I_{11}R_2 + I_{22}(R_2 + R_3) = -E_2 - E_3. \end{cases}$$

Sign rules. The value of EMF. Any source is considered with “+” signs, if its direction coincides with the direction of mesh current (the direction of summation round the mesh). A voltage drop created by a natural mesh current is always considered with "+" sign, and voltage drops created in contour elements by the currents of adjacent contours are considered with "+"signs if the currents of the adjacent contours flow through the adjacent branches in the same direction as the natural mesh current.

For each loop, second Kirchhoff’s law is applied which allows drawing up p-(q+1) equations with respect to mesh current. Similarly for any multi-mesh circuit with n contours the simultaneous equations according to the mesh-current method can be written as

$$\begin{cases} I_{11}R_{11} + I_{22}R_{12} + I_{33}R_{13} + \cdots + I_{nn}R_{1n} = E_{11}; \\ I_{11}R_{21} + I_{22}R_{22} + I_{33}R_{23} + \cdots + I_{nn}R_{2n} = E_{22}; \\ \dots\dots\dots\dots\dots\dots\dots\dots\dots\dots\dots\dots \\ I_{11}R_{n1} + I_{22}R_{n2} + I_{33}R_{n3} = + \cdots + I_{nn}R_{nn} = E_{nn}, \end{cases}$$

where

E_{nn} – ***loop EMF*** means to take the algebraic sum of all voltage sources around the nth mesh.

R_{nn} – means the total ***self resistance*** around the nth mesh;

R_{nk} – means the ***mutual resistance*** between the nth and k^{th} meshes;

Note: Generally $R_{nk} = R_{kn}$ (true only for linear bilateral circuits);

I_{nn} – the unknown mesh currents for the network.

So the order of the analysis is the following:

Step-1: If possible, convert current source to voltage source.

Step-2: Label the mesh currents (I_{nn}) in a clockwise direction.

Step-3: Write the mesh equations using the given above system for any multi-mesh circuit with *n* contours.

Mesh analysis is valid only for circuits that can be drawn in a two-dimensional plane in such a way that no element crosses over another.

Example 3. Let us consider a complex DC network as shown in Figure 6.3 to find the currents flowing through different branches using Mesh current method. The simultaneous equations according to the mesh current method can be written as

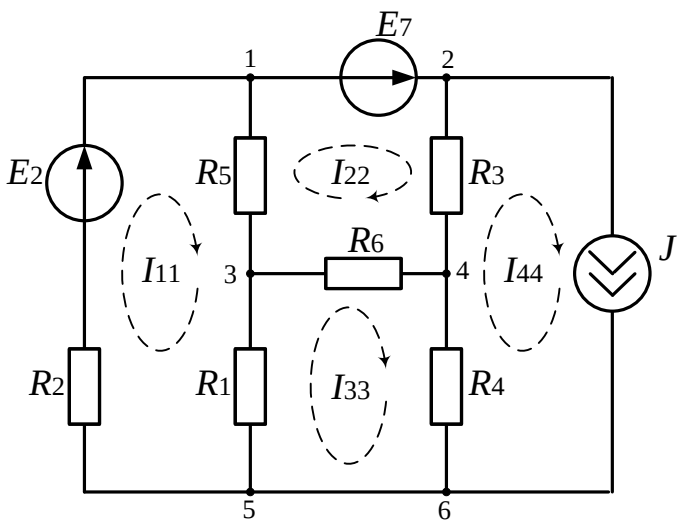

Fig. 6.3

$$\begin{cases} I_{11}R_{11} + I_{22}R_{12} + I_{33}R_{13} + I_{44}R_{14} = E_{11}; \\ I_{11}R_{21} + I_{22}R_{22} + I_{33}R_{23} + I_{44}R_{24} = E_{22}; \\ I_{11}R_{31} + I_{22}R_{32} + I_{33}R_{33} + I_{44}R_{34} = E_{33}; \\ I_{44} = J. \end{cases}$$

The ***self resistances*** are

$$R_{11} = R_1 + R_2 + R_5;$$
$$R_{22} = R_3 + R_6 + R_5;$$
$$R_{33} = R_1 + R_6 + R_4.$$

The ***mutual resistances*** are resistances between loops.

$$R_{12} = R_{21} = -R_5; \quad R_{14} = 0; \quad R_{13} = R_{31};$$
$$R_{14} = -R_3; \quad R_{23} = R_{32} = -R_6; \quad R_{34} = -R_4.$$

The ***mutual resistances*** has the ***"-" sign*** if two mesh currents in the common branch flow against each other, and the ***"+" sign*** if they flow in the same direction. The ***loop EMFs:***

$$E_{11} = E_2; \quad E_{22} = E_7; \quad E_{33} = 0.$$

Find the unknown currents using the mesh currents for the network:

$$I_1 = I_{11} - I_{33}; \quad I_2 = I_{11}; \quad I_3 = I_{22} - I_{44};$$
$$I_4 = I_{33} - I_{44}; \quad I_5 = I_{22} - I_{11}; \quad I_6 = I_{22} - I_{33};$$
$$I_7 = I_{22}.$$

6.3. The Node-analysis Method

The current in any branch of a circuit can be found by Ohm's law for a branch containing an EMF. This calls for knowledge of the potential difference across the terminals of the branch or, which is the same, across the nodes bounding the branch in question. Calculation of the current in the circuit using the potentials values of its nodes is known as the node-analysis method.

When making the equations by node-analysis method one must choose a basis node to be earthed. In this case, the distribution of currents does not change. In other words, we consider that its potential is equal to zero. As a result, the number of unknown potentials becomes equal to the number of the independent

equations which are made by the first Kirchhoff's law. Solving the system concerning these potentials, it is possible to define currents using known potentials.

This method is expedient to use for calculation of the complicated electric circuits with a small amount of nodes. It allows us to avoid the equations written by the second Kirchhoff's law.

Generally for any compound circuit it is necessary to make a system of equations of the following state:

$$\begin{cases} \varphi_1 G_{11} - \varphi_2 G_{12} - \cdots - \varphi_k G_{1k} - \cdots - \varphi_n G_{1n} = J_{11}; \\ -\varphi_1 G_{21} + \varphi_2 G_{22} - \cdots - \varphi_k G_{2k} - \cdots - \varphi_n G_{2n} = J_{22}; \\ \cdots\cdots\cdots\cdots\cdots\cdots\cdots\cdots\cdots\cdots\cdots\cdots \\ -\varphi_1 G_{21} + \varphi_2 G_{22} - \cdots - \varphi_k G_{kk} - \cdots - \varphi_n G_{2n} = J_{kk}; \\ \cdots\cdots\cdots\cdots\cdots\cdots\cdots\cdots\cdots\cdots\cdots\cdots \\ -\varphi_1 G_{n1} - \varphi_2 G_{n2} - \cdots - \varphi_k G_{nk} - \cdots + \varphi_n G_{nn} = J_{nn}. \end{cases}$$

k is a variable number of a node from 1to n;

$\varphi_1, \varphi_2, \ldots \varphi_k, \ldots \varphi_n$ – are unknown nodal potentials;

$G_{11}, G_{22}, \ldots G_{kk}, \ldots G_{nn}$ – are ***self-conductances of nodes***; each of them is the total conductance of branches which are joined to the appropriate node;

$G_{nk} = G_{kn}$ – are ***mutual conductances of nodes***; each of them is the total conductance of branches which join nodes k and n;

$J_{11}, J_{22}, \ldots J_{kk}, \ldots J_{nn}$ – are the ***nodal currents*** considering the presence of energy sources in branches, which are joined to the appropriate node,

$J_{nn} = \sum_{m=1}^{n} E_m G_m + \sum_{m=1}^{n} J_m$ is the nodal current of node k.

Here $\sum_{m=1}^{n} E_m G_m$ is the algebraic sum of multiplications of the branch EMFs, joined to the node k, by the conductance of these branches. If Em is directed towards the node, then this multiplication is ‘+’; if Em has the opposite direction, the this multiplication is ‘_’.

$\sum_{m=1}^{n} J_m$ is an algebraic sum of the currents sources in branches which are joined to the node *k*. Those currents sources directed towards the node enter the sum with a plus sign, and those directed from the node enter the sum with a minus sign.

Solving the system, we define nodal potentials $\varphi_1, \varphi_2, \ldots \varphi_k, \ldots \varphi_n$ and then the actual currents in the branches using the Om's law.

Let's consider this procedure as an example.

Example 4. Suppose, we have the direct current electric circuit (Fig. 6.4) with the parameters of energy sources and resistances. Now let's calculate currents in all branches of the electric circuit.

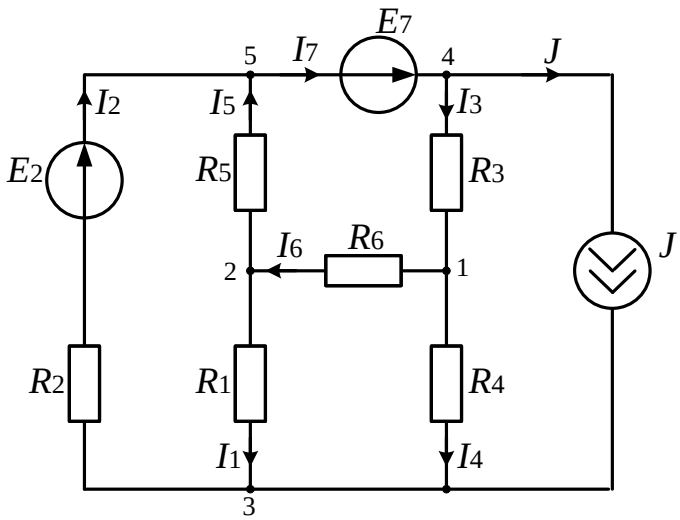

Fig. 6.4

We will choose arbitrarily the directions of branch currents. Let's express currents in branches by Ohm's law using circuit parameters and unknown nodal potentials.

$$I_1 = \frac{\varphi_2 - \varphi_3}{R_1} = (\varphi_2 - \varphi_3)G_1; \quad I_2 = \frac{\varphi_3 - \varphi_0 + E_7}{R_2} = (\varphi_3 - \varphi_0 + E_7)G_2;$$

$$I_3 = \frac{\varphi_4 - \varphi_1}{R_3} = (\varphi_4 - \varphi_1)G_3; \quad I_4 = \frac{\varphi_1 - \varphi_3}{R_4} = (\varphi_1 - \varphi_3)G_4;$$

$$I_5 = \frac{\varphi_2 - \varphi_0}{R_5} = (\varphi_2 - \varphi_0)G_5; \quad I_6 = \frac{\varphi_1 - \varphi_3}{R_6} = (\varphi_1 - \varphi_3)G_6.$$

The current in the seventh branch is defined by the first Kirchhoff's law

$$I_7 = I_2 + I_5.$$

The potential of node ***5*** is chosen to be earthed (at zero potential) $\varphi_5 = 0,$ as a result $\varphi_4 = E_7$. So, we have to determine only the potentials of three nodes.

Let's work out the equations for ungrounded nodes ***1***, ***2***, ***3*** by the first Kirchhoff's law:

$$I_3 - I_6 - I_4 = 0,$$
$$I_6 - I_5 - I_1 = 0,$$
$$I_1 + I_4 + J - I_2 = 0.$$

Then we rewrite these equations using currents expressions in branches by Ohm's law:

$$1.\ \varphi_1\left(\frac{1}{R_3} + \frac{1}{R_4} + \frac{1}{R_6}\right) - \varphi_2\frac{1}{R_6} - \varphi_3\frac{1}{R_4} - E_7\frac{1}{R_3} = 0;$$
$$2.\ -\varphi_1\frac{1}{R_6} + \varphi_2\left(\frac{1}{R_1} + \frac{1}{R_5} + \frac{1}{R_6}\right) - \varphi_3\frac{1}{R_1} - E_7 \cdot 0 = 0;$$
$$3.\ -\varphi_1\frac{1}{R_4} - \varphi_2\frac{1}{R_1} + \varphi_3\left(\frac{1}{R_1} + \frac{1}{R_2} + \frac{1}{R_4}\right) - E_7 \cdot 0 = -\frac{E_2}{R_2} + J.$$

Generally for this example the simultaneous equations according to the node analysis method can be written as

$$1.\ \varphi_1 G_{11} - \varphi_2 G_{12} - \varphi_3 G_{13} - \varphi_4 G_{14} = J_{11};$$
$$2.\ -\varphi_1 G_{21} + \varphi_2 G_{22} - \varphi_3 G_{23} - \varphi_4 G_{24} = J_{22};$$
$$3.\ -\varphi_1 G_{31} - \varphi_2 G_{32} + \varphi_3 G_{33} - \varphi_4 G_{34} = J_{33}.$$

Here the self-conductance of node ***1*** is $G_{11} = \frac{1}{R_3} + \frac{1}{R_4} + \frac{1}{R_6}$ Sm,

the self-conductance of node ***2*** is $G_{22} = \frac{1}{R_1} + \frac{1}{R_5} + \frac{1}{R_6}$ Sm,

the self-conductance of node ***3*** is $G_{33} = \frac{1}{R_1} + \frac{1}{R_2} + \frac{1}{R_4}$ Sm,

the mutual conductance of nodes *1* and *2* is $G_{12} = G_{21} = -\frac{1}{R_6}$ Sm,

the mutual conductance of nodes *1* and *3* is $G_{13} = G_{31} = -\frac{1}{R_4}$ Sm,

the mutual conductance of nodes *2* and *3* is $G_{23} = G_{32} = -\frac{1}{R_1}$ Sm,

the nodal current of node *1* is $J_{11} = E_7 \frac{1}{R_3}$ A,

the nodal current of node *2* is $J_{22} = 0$ A,

the nodal current of node *3* is $J_{33} = -\frac{E_2}{R_2} + J$ A.

6.4. Nodal Pairs or the Method of Two nodes

Sometimes an electric circuit may have only two nodes, as shown in Fig. 6.5.

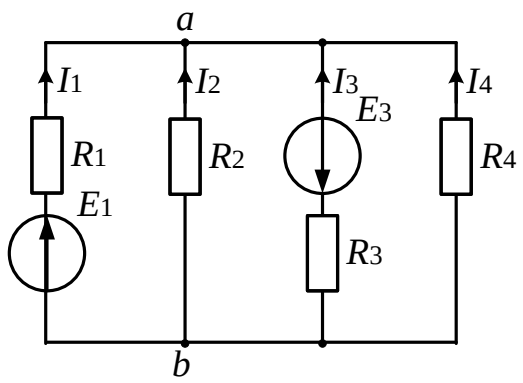

Fig. 6.5

The currents in such a network can be conveniently found by the nodal-pair method. According to this method at first we define the voltage between two nodes then the branches currents are found by Ohm's law.

Let's consider junction *b* to be earthed ($\varphi_b = 0$), then apply the method of nodal potentials:

$$U_{аб} = \varphi_a - \varphi_б = \frac{\sum \pm E_k G_k + \sum \pm J_k}{\sum G_k},$$

where U_{ab} is the voltage between two nodes;

$\sum E_k G_k$ is the algebraic sum of multiplications of the branch EMFs joined to the node, by the conductances of these branches;

$\sum J_k$ is the algebraic sum of the values of current sources in the branches which are joined to the node;

$\sum G_k$ is the sum of branches conductances of the electric circuit.

After definition of voltage $U_{ab,}$ a current in any branch *n* that does not have a current source, is defined according to the Ohm's law for a circuit section:

$$I_n = \left(\pm E_n - U_{aб}\right) G_n ,$$

where the EMFs which direct towards node *a* are considered with a plus sign, and those which direct from the node *a* - with a minus sign.

6.5. The Method of Direct Application of Ohm's law (the method of equivalent transformations) and Star-Delta Transformation

We can solve simple series and parallel type resistive networks using Ohm's and Kirchhoffes´ Circuit Laws, mesh current analysis or nodal voltage analysis methods but there are circuits where we can use different analysis methods to simplify the analysis of the circuit and thereby reduce the amount of equations for the circuit analysis.

The essence of the Ohm's law direct application method (it is also named the method of equivalent transformations) consists in replacement of circuit sections with the equivalent resistances. It allows us to reduce a complex circuit to the elementary one, i.e. consisting of an energy source and the equivalent resistance. After the transformation of a circuit the calculations is simplified to a series of arithmetic operations by Ohm's law. To define the current through the transformed parts of the circuit, you must carry out some return transformation of the equivalent electric scheme to the initial one, calculating voltages across the parts of the circuit and distribution of currents in parallel branches. The method of equivalent transformations is expedient to apply for the solving of problems in which the electric circuit has no more than three contours.

There are some parts of complex circuit in which the resistances are connected as a Star connection which has the symbol of the letter **Y** (wye) and/or a Delta connection which has the symbol of a triangle, **Δ** (delta).

A resistive network consisting of three impedances can be connected together to form a ***T*** or "***Tee***" configuration but the network can also be redrawn to form a **Star** or **Y** type network as shown below.

T-connected and Equivalent Star Network

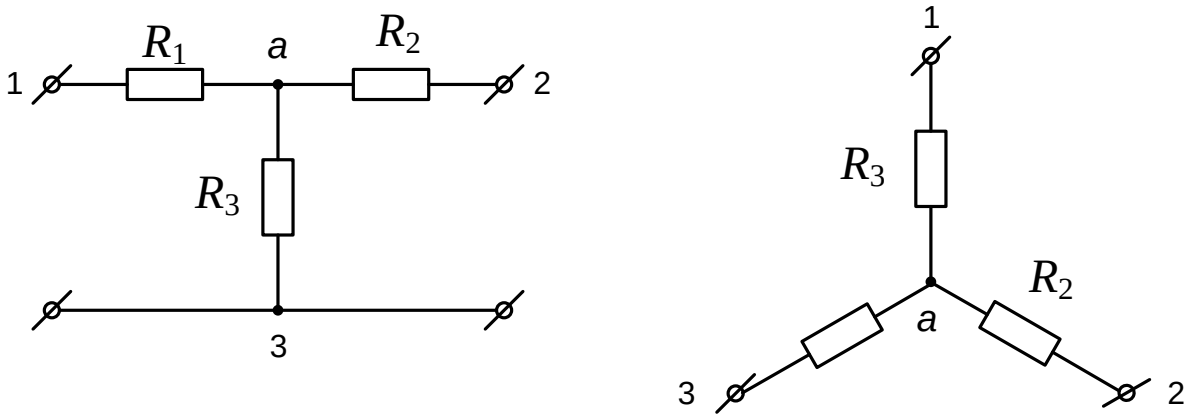

T-Network Star-network

Fig. 6.6

We can also convert a ***Pi*** or ***π*** type resistor network into an electrically equivalent **Delta** or **Δ** type network as shown below.

Pi-connected and Equivalent Delta Network

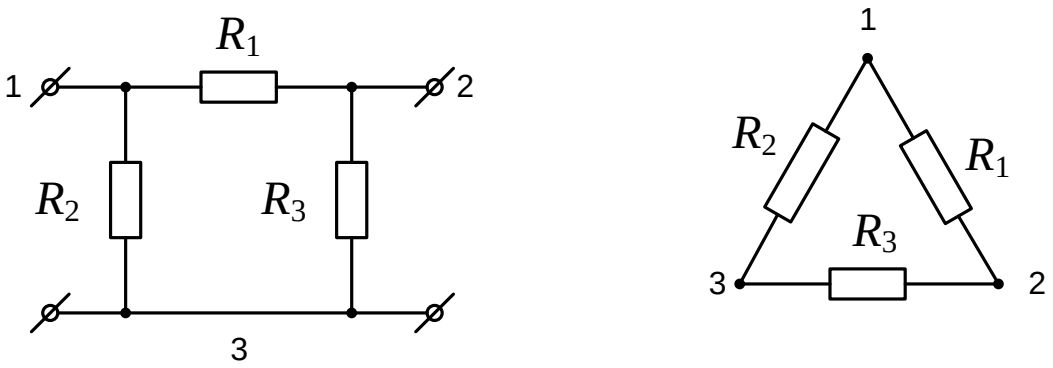

Pi-Network Delta-Network

Fig. 6.7

Having now defined exactly what a **Star** connected network and **Delta** connected network are, it is possible to transform the Y into an equivalent Δ circuit and also to convert a Δ into an equivalent Y circuit using the transformation process.

This process allows us to produce a mathematical relationship between the various resistors giving us a **Star Delta Transformation** as well as a **Delta Star Transformation**.

These circuit transformations allow us to change the three connected resistances (or impedances) by their equivalents measured (located) between terminals 1-2, 1-3 or 2-3 for either a star or delta connected circuit. However, Star-Delta Transformation equivalent does not change voltages and currents in that part of network that has not been transformed.

Delta Star Transformation.

To convert a delta network to an equivalent star network we need to derive a transformation formula for equating the various resistors to each other between the various terminals. Let's consider the circuit below.

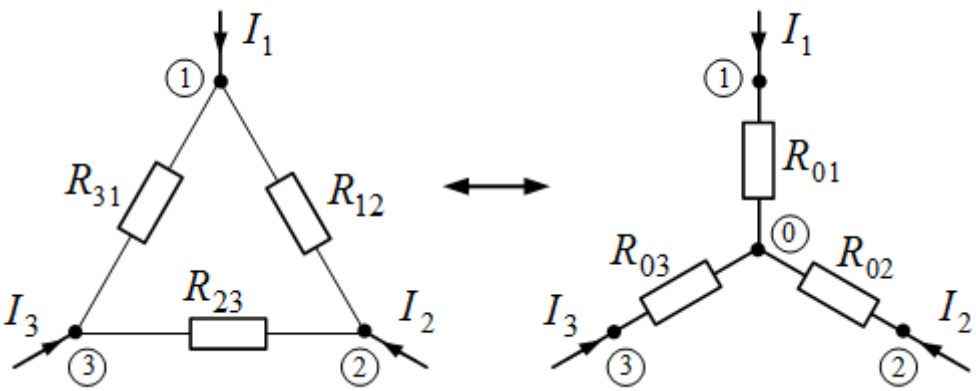

a) b)

Fig. 6.8

Delta to Star Transformations Equations

$$R_{01} = \frac{R_{12} \cdot R_{31}}{R_{12} + R_{23} + R_{31}}, \quad R_{02} = \frac{R_{12} \cdot R_{23}}{R_{12} + R_{23} + R_{31}}, \quad R_{03} = \frac{R_{23} \cdot R_{31}}{R_{12} + R_{23} + R_{31}}.$$

Star to Delta Transformations Equations

$$R_{12} = R_1 + R_2 + \frac{R_1 R_2}{R_3},\ R_{23} = R_2 + R_3 + \frac{R_2 R_3}{R_1},\ R_{31} = R_1 + R_3 + \frac{R_1 R_3}{R_2}.$$

6.6. The Superposition Theorem

The superposition theorem (or the *method of superposition*) consequently follows from superposition principle.

While analyzing any electric circuit by the method of superposition we must leave only one energy source in it and define partial currents in all its branches. For this purpose all energy sources, except one, are considered to be absent: EMF sources are replaced by short circuited cross connections, and branches with current sources are broken. Using the replace principle mentioned ve we remove all energy sources, except one, and define partial currents from the action of energy source. We repeat calculation of partial currents from action of each energy source singly. Current in each branches are the algebraic sum of the particular currents in this branch.

The current in the *k*-th branch and voltage across *k*-th element can be found by the following equations:

$$I_k = \pm\sum_{s=1}^{m} I_{ks} = \pm I_{k1} \pm I_{k2} \pm \ldots \pm I_{km} = \pm\sum_{s=1}^{m} E_s \cdot G_{ks},$$

$$U_k = \pm\sum_{s=1}^{m} U_{ks} = \pm U_{k1} \pm U_{k2} \pm \ldots \pm U_{km} = \pm\sum_{s=1}^{m} E_s \cdot K_{ks},$$

where I_{ks} та U_{ks} – particular current in the *k*-th branch and particular voltage across k-th element when EMF in the *s*-th branch is acting;

E_s is given electromotive forces;

G_{ks} is the conductance of corresponding branches.

The equations given above are mathematical expressions of the theorem which may be also stated as follows: *The current in any branch of a network is the algebraic sum of the currents due to each source separately with all other sources removed and the internal resistances of all sources left in the circuit*.

The superposition theorem can be used only for linear electric circuits, that is, for the circuits *U/I* characteristics of which are straight lines. It is expedient for applying, if the amount of energy sources is insignificant.

Let's observe the use of the method on the instance of the electric circuit (see Fig 6.9) with two energy sources.

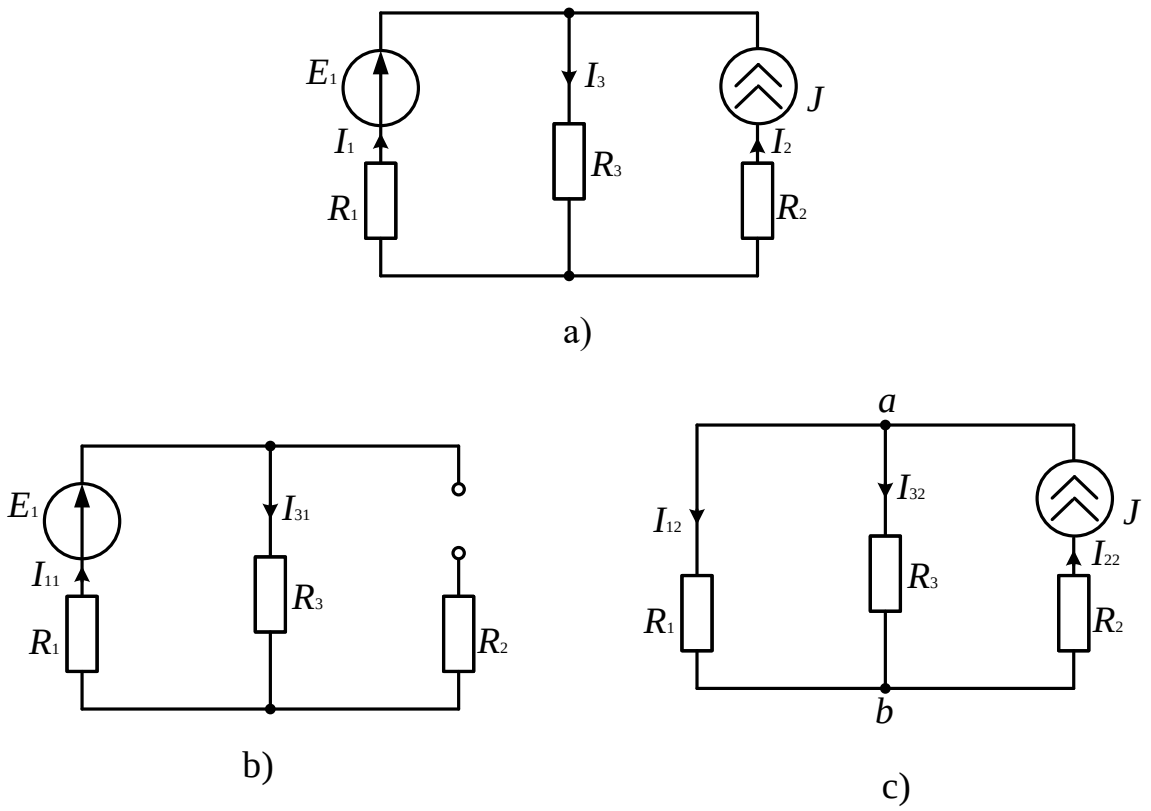

Fig. 6.9

We set the positive directions of currents (see Fig. 6.9, a).

Now we must calculate currents in all branches of a circuit from each energy source separately.

At first we define partial currents only from the action of the EMF source breaking the current source (see Fig. 6.9, b). As a result there is an open circuit in the branch instead of the current source, as its internal resistance is equal to infinity:

$$I_{11} = I_{31} = \frac{E_1}{R_1 + R_3}, \quad I_{21} = 0 .$$

Then we remove the EMF source and define partial currents from the current source (see Fig. 6.9, c). There is a short-circuited across connection in the branch as its internal resistance is equal to zero. To calculate these partial currents it is convenient to use Ohm's law and equivalent transformations of circuit.

$$I_{32} = \frac{U_{ab}}{R_3} = \left(J \cdot \frac{R_2 R_3}{R_2 + R_3} \right) \frac{1}{R_3} = J \cdot \frac{R_2}{R_2 + R_3},$$

$$I_{12} = \frac{U_{ab}}{R_2} = \left(J \cdot \frac{R_2 R_3}{R_2 + R_3} \right) \frac{1}{R_2} = J \cdot \frac{R_3}{R_2 + R_3},$$

$$I_{22} = J.$$

We have got real required currents algebraically adding the appropriate partial currents created by separate energy sources, taking into account their directions:

$$I_1 = I_{11} - I_{12} = E_1 G_{11} + E_2 G_{12},$$
$$I_2 = I_{31} + I_{32} = E_1 G_{21} + E_2 G_{22},$$
$$I_3 = J.$$

where

the self-conductance of 1st branch is $G_{11} = \frac{I_{11}}{E_1}$,

the self-conductance of 2d branch is $G_{22} = \frac{I_{22}}{E_2}$

the mutual conductance of branch 1 and 2 are $G_{12} = \frac{I_{12}}{E_2}$ and $G_{21} = \frac{I_{21}}{E_1}$.

6.7. Thevenin's Theorem or equivalent generator Method

Active and passive two-pole unit. The two-pole unit (or two-terminal network) is a generalizing name of an electric circuit of any complexity or its part which has two terminals. The two-terminal network is conditionally represented by a rectangle in figures.

A two-terminal network containing neither a voltage nor a current source, is termed *passive* (marked by letter P in Fig. 6.10, *a*). The passive two-pole unit is characterized by one parameter – an input resistance R_{in} (as in Fig. 6.10, *b*). The

open circuit (or idling) voltage $U_{O.C.}$ and the short circuit current $I_{Sh.C.}$ are equal to zero here.

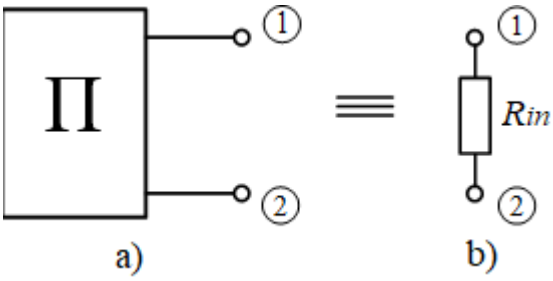

Fig. 6.10

A two-terminal network containing a voltage or a current source, or both, is called *active* (marked by letter *A* in Fig. 6.11, *a*).

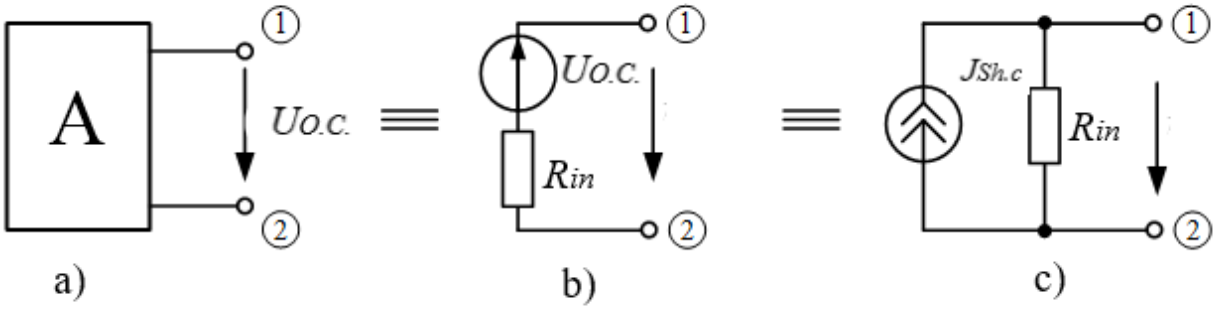

Fig. 6.11

The active two-pole unit is characterized by three interconnected parameters: an open circuit (or an idling) voltage $U_{O.C.}$, a short circuit current $I_{Sh.C.}$ and an input resistance R_{in} .

It is possible to replace an active two-pole unit with an equivalent real EMF source (as Fig. 6.11, *b*), the EMF of which is equal to the idling voltage between two terminals, and its internal resistance is equal to the input resistance of a two-terminal network, or the real current source (as Fig. 6.11, *c*) the current of which is equal to a short circuit current of a two-pole unit, and its internal resistance is equal

to the input resistance of a two-terminal network too. The input resistance is defined when all energy sources are removed (branches with ideal current sources are broken off, and ideal voltage sources are replaced with short-circuited crosspieces). The short circuit current and the idling voltage are defined by means of any known method of calculation. The parameters of two-terminal network can be defined experimentally with the help of idling experience (one must connect the voltmeter to two terminals), and short circuit experience (one must connect the amperemeter to two terminals). The input resistance of a two pole unit then is defined by

$$R_{in} = \frac{U_{O.C.}}{I_{Sh.C.}}.$$

Thevenin's Theorem.

Thevenin'S Theorem is an analytical method used to change a complex circuit into a simple equivalent circuit consisting of a single resistance in series with a source voltage.

This theorem states that ***you can take any linear circuit, which can contain several emfs and resistive components, and simplify the circuit into one voltage source and series resistance connected to a load.*** This simplified circuit is called Thevenin Equivalent Circuit as shown below

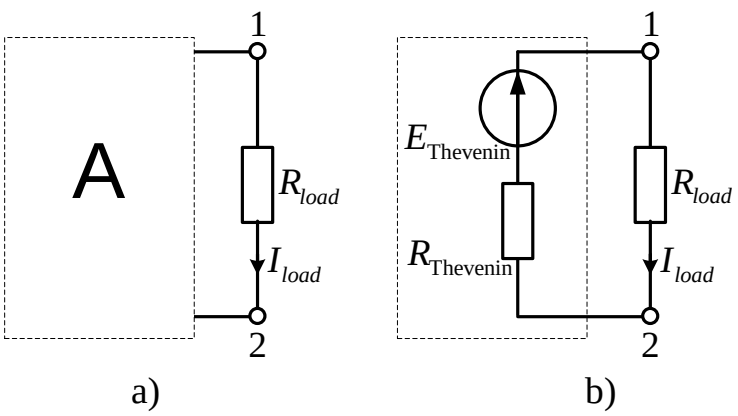

Fig. 6.12

Thevenin's Theorem provides an easy method for analyzing power circuits, which typically has a load that changes value during the analysis process. This

theorem provides an efficient way to calculate the voltage and current flowing across a load without having to recalculate your entire circuit over again.

Thevenin's Theorem also provides an efficient way to focus your analysis on a specific portion of a circuit. This allows you to calculate the voltage and current at a specific terminal by simplifying the rest of the circuit with Thevenin's equivalent.

As having said above Thevenin Equivalent Circuit is consisted of a single voltage source E_{Thevenin} in series with a single resistor R_{Thevenin}. The value of E_{Thevenin} is the open circuit voltage across the terminals as

$$E_{\text{Thevenin}} = U_{O.C.}$$

The Thevenin resistance R_{Thevenin} is the resistance measured or calculated across opened terminals of the load with all voltage sources replaced by short circuits and all current sources replaced by open circuits as

$$R_{\text{Thevenin}} = R_{in}.$$

This method is known as *Thevenin's Theorem* or *equivalent generator method*.

Let's summarize the main steps to apply *Thevenin's Theorem*

Step-I: Find the Thevenin Resistance by removing all voltage sources and load.

Step-II: Find the Thevenin Voltage by reconnecting the voltage sources.

Step-III: Use Ohm's Law to calculate the current flowing through the load resistor like this

$$I_{load} = \frac{E_{\text{Thevenin}} \pm E_{load}}{R_{\text{Thevenin}} + R_{load}}.$$

LITERATURE

1. Англо-український словник: У 2 т.- Близько 120 000 слів / Склав М.І. Балла.- Київ: Освіта, 1996

2. Бессонов Л.А. Теоретические основы электротехники: Учебник для вузов. - М: Высшая школа, 1988. - 528 с.

3. Зевеке Г.В., Ионкин П.А., Нетушил А.В. и др. Основы теории цепей. - М.: Энергоатомиздат, 1987. - 528 с.

4. Набокова О. В. Теоретична електротехніка: Навчальний посібник. - Запоріжжя: ЗНТУ, 2015. – 477с.

5. Atabekov G. I. Linear Network Theory. Great Britan. 1964. 635p.

6. Khilov V. S. Theoretical Fundamentals of Electrical Engineering Ministry of Since and Education of Ukraine, national Mining University. Dnipro. Ukraine. 2018. – 467 p.