Ministry of Education and Science of Ukraine

NATIONAL TECHNICAL UNIVERSITY OF UKRAINE

“IGOR SIKORSKY KYIV POLYTECHNIC INSTITUTE”

PHYSICS:

MOLECULAR PHYSICS:

Laboratory works

Approved by the by the Methodical Board of
the Igor Sikorsky Kyiv Polytechnic Institute
as a study aid for the foreign students
for the specialties 134 Aviation, rocket and space machinery;
173 Avionics; 152 Metrology and information-measurement engineering
of the Faculty of Aerospace Systems

Kyiv

Igor Sikorsky Kyiv Polytechnic Institute

2017

“Physics: Molecular physics: Laboratory works” [Electronic Publication]: study aid for the foreign students for the specialties 134 Aviation, rocket and space machinery; 173 Avionics; 152 Metrology and information-measurement engineering of the Faculty of Aerospace Systems / Igor Sikorsky Kyiv Polytechnic Institute; compiler: M.V. Chursanova. – Electronic text data (1 file: 1Mb). – Kyiv: Igor Sikorsky Kyiv Polytechnic Institute, 2017. – 44 p.

Classified Publication approved by the Methodical Board of the Igor Sikorsky Kyiv Polytechnic Institute (minutes No 3; 23.11.2017)
according to the presentation by the Academic Board of Faculty of Physics and Mathematics (minutes No 6; 26.09.2017)

Electronic Publication

PHYSICS:

MOLECULAR PHYSICS

Laboratory works

Compiler:

Chursanova Maryna Valeriivna – docent, PhD

Editor-in-Chief:

Gorshkov V.M. – director of the Department of General Physics and Solid State Physics, Doctor of Physical and Mathematical Sciences, Professor

Reviewer:

Reshetnyak S.O. – professor of the Department of General and Experimental Physics, Doctor of Physical and Mathematical Sciences, Professor.

ANNOTATION
For the educational publication
“Physics: Molecular physics: Laboratory works”

Methodical recommendations for laboratory works in Physics for students who study section "Molecular physics and thermodynamics" in physics and are under the Bachelor’s degree study program the for the specialties 134 Aviation, rocket and space machinery; 173 Avionics; 152 Metrology and information-measurement engineering of the Faculty of Aerospace Systems. It also could be used for other students’ specialties at the National Technical University of Ukraine “Igor Sikorsky Kyiv Polytechnic Institute”.

Methodical recommendations for laboratory works in Physics are designed for the foreign students and written in English, they are understandable and at the same time they correspond to the "Physics" course curriculum for the Faculty of Aerospace Systems by the level of material presentation. Methodical recommendations are a practical guide for performing laboratory works in the laboratories of the Faculty of Physics and Mathematics. They provide students with an opportunity to get acquainted with fundamental laws of physics and to verify directly the implementation of these laws in experiments, to form a sufficient level of competence for carrying out physical experiments, processing data and estimating results.

There are laboratory works from the section "Molecular physics and thermodynamics " in the present publication, namely, such topics as «Determination of fluid viscosity by the Stokes method», «Determination of the ratio of the air heat capacity at constant pressure to its heat capacity at constant volume», «Study of the laminar flow of gas through the thin tube», «Study of the Boltzmann distribution law».

The text of the protocol of each laboratory work is accompanied by necessary explanations, illustrations, tables, description of the experimental setup, the procedure order and processing of the experimental results, control questions.

Laboratory work 1-5

Determination of fluid viscosity by the Stokes method

Objective: study of motion of a particle under a force, which is proportional to its velocity; determination of the glycerin viscosity coefficient.

Equipment: glass cylinder filled with examined liquid (glycerin), thermometer, hydrometer, micrometer, stopwatch, ruler, Vernier caliper, small balls.

5.1. Theoretical information

Determination of dynamic viscosity in a Stokes viscometer is based on a study of free fall of a small spherical body (ball) in the examined fluid. A drag force (fluid resistance) is exerted on the moving object in a viscous fluid. It depends on many factors such as geometric shape of the body, nature of the flow, viscosity coefficient of the fluid, and so on.

Nature of the flow is indicated by the Reynolds number (Re). It is used to predict the transition from laminar to turbulent flow. Laminar flow occurs at low Reynolds numbers, where viscous forces are dominant, and is characterized by smooth, constant fluid motion; turbulent flow occurs at high Reynolds numbers and is dominated by inertial forces, which tend to produce chaotic eddies, vortices and other flow instabilities behind the moving object.

In the case of turbulent flow, the pressure is lowered in the region of vortices, resulting in a pressure difference between the anterior and posterior surfaces of the body and causing additional resistance force. Thus, the total fluid resistance consists of resistance due to friction (the Stokes' drag) and resistance due to the pressure difference, and their relative contribution is determined by the Re value.

The condition for the laminar flow is

$$Re < Re_{cr}, \qquad (5.1)$$

where Re_{cr} is the critical value of the Reynolds number which depends on the liquid properties. The value of the Reynolds number is defined by the ratio of inertial forces to viscous forces within a fluid:

$$\mathrm{Re} = \frac{vr\rho_1}{\eta},$$

where v is a velocity of the object with respect to the fluid, r is a characteristic linear dimension of the object, ρ_1 is density of the fluid, η is the dynamic viscosity of the fluid.

For the small Reynolds numbers

$$\mathrm{Re} = \frac{vr\rho_1}{\eta} << 1 \qquad (5.2)$$

the Stokes flow approximation may be considered. This is a typical situation in flows where the fluid velocities are very slow, the viscosities are very large, or the length-scales of the flow are very small. Under such conditions, the relationship between the drag force and speed of motion in the boundless viscous liquid is given by the Stokes' law:

$$F_d = 6\pi r\eta v, \qquad (5.3)$$

where F_d is the Stokes' drag, η is the dynamic viscosity, r is the radius of the spherical object, v is its speed.

The criterion (5.2) ensures not only the Stokes law application, but also the laminar nature of the flow, since the condition (5.1) is also fair in this case.

Consider motion of a small ball of mass m falling slowly in a boundless viscous fluid. There are three forces acting on the ball: gravitational force $m\vec{g}$, buoyant force $\vec{F}_b$ given by the Archimedes' principle ($F_b = \rho_1 gV$, where ρ_1 is the density of the fluid, V is the volume of the ball) and fluid resistance $\vec{F}_d$ given by the Stokes law. The free-body diagram is shown in Fig. 5.1. According to the Newton's second law:

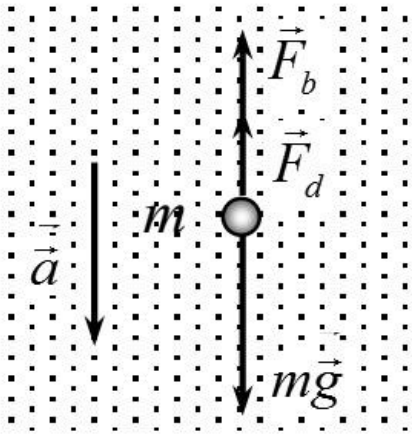

Figure 5.1.

$$m\vec{a} = m\vec{g} + \vec{F}_b + \vec{F}_d ,$$

where $\vec{a}$ is the acceleration of the ball. Projecting this equation onto the direction of the acceleration vector, we obtain:

$$m\frac{dv}{dt} = mg - F_b - F_d \text{, or}$$

$$\rho V \frac{dv}{dt} = Vg(\rho - \rho_1) - 6\pi r\eta v, \tag{5.4}$$

where ρ is the density of the material of the ball, V is its volume.

In order to solve the equation (5.4), we rewrite it in the following way:

$$\frac{dv}{dt} = -\frac{6\pi r\eta}{\rho V}\left(v - \frac{Vg(\rho - \rho_1)}{6\pi r\eta}\right), \tag{5.5}$$

noting that the value

$$B = \frac{Vg(\rho - \rho_1)}{6\pi r\eta} \tag{5.6}$$

does not depend on time and has dimension of speed. This allows us to write the equation (5.5) as a differential equation with separate variables

$$\frac{d(v - B)}{dt} = -\frac{6\pi r\eta}{\rho V}\left(v - B\right), \tag{5.7}$$

or

$$\frac{d(v-B)}{v-B} = -\frac{6\pi r\eta}{\rho V}dt\,. \tag{5.8}$$

After integration we obtain

$$\ln(v-B) = -\frac{6\pi r\eta}{\rho V}t + \ln C\,, \tag{5.9}$$

where $\ln C$ is an arbitrary constant.

Finally,

$$v(t) = Ce^{-\frac{6\pi r\eta}{\rho V}t} + B\,. \tag{5.10}$$

Thus, dependence of the velocity of the ball on time is determined by the formula:

$$v(t) = Ce^{-\frac{6\pi r\eta}{\rho V}t} + \frac{Vg(\rho-\rho_1)}{6\pi r\eta}\,. \tag{5.11}$$

The arbitrary constant C is determined by the initial velocity of the ball at which it enters the liquid, that is, it may be found from condition

$$v(t=0) = v_0\,. \tag{5.12}$$

(measurement of time starts from the moment when the ball crosses the surface of liquid).

Using the general solution (5.11) and condition (5.12), we determine that

$$C = v_0 - \frac{Vg(\rho-\rho_1)}{6\pi r\eta}\,. \tag{5.13}$$

Finally,

$$v(t) = \frac{Vg(\rho-\rho_1)}{6\pi r\eta} - \left(\frac{Vg(\rho-\rho_1)}{6\pi r\eta} - v_0\right)e^{-\frac{6\pi r\eta}{\rho V}t}\,. \tag{5.14}$$

Let's analyze the solution (5.14). At $t \to \infty$, $v \to v_{set}$, where $v_{set} = \dfrac{Vg(\rho - \rho_1)}{6\pi r\eta}$ is the setting (or terminal) velocity. The condition $t \to \infty$ from the physical point of view means that $t >> \tau$, where $\tau = \dfrac{\rho V}{6\pi r\eta}$ is so-called relaxation time, that is, the time at which the motion becomes uniform (a = 0). That is, an object is moving at its terminal velocity if its speed is constant due to the restraining forces exerted by the fluid having balanced the gravitational force.

Let's rewrite the solution (5.14) in a more convenient form:

$$v(t) = v_{set} - \left(v_{set} - v_0\right)e^{-\frac{6\pi r\eta}{\rho V}t}. \qquad (5.15)$$

Graph of this function (see Fig. 2.5) gives a clear idea of the nature of the ball motion.

Thus, regardless of the initial velocity v_0, at which the ball enters the liquid, in time $t >> \tau$ we can speak about the uniform motion of the ball at the speed v_{set} with sufficient accuracy.

Task1. Show that in time $t = 3\tau$ the deviation of speed from the setting value is ~ 5%, that is, determine the value of $\dfrac{v_{set} - v(3\tau)}{v_{set}}$ considering that the ball is released when it touches the surface of the liquid, i.e. $v_0 = 0$.

By measuring the setting speed v_{set} of the falling ball and knowing its radius, densities of the ball's material ρ and liquid ρ_1, we can calculate the viscosity coefficient using the formula

$$\eta = \frac{2}{9} g r^2 \frac{\rho - \rho_1}{v_{set}}. \qquad (5.16)$$

This is the idea of the Stokes method.

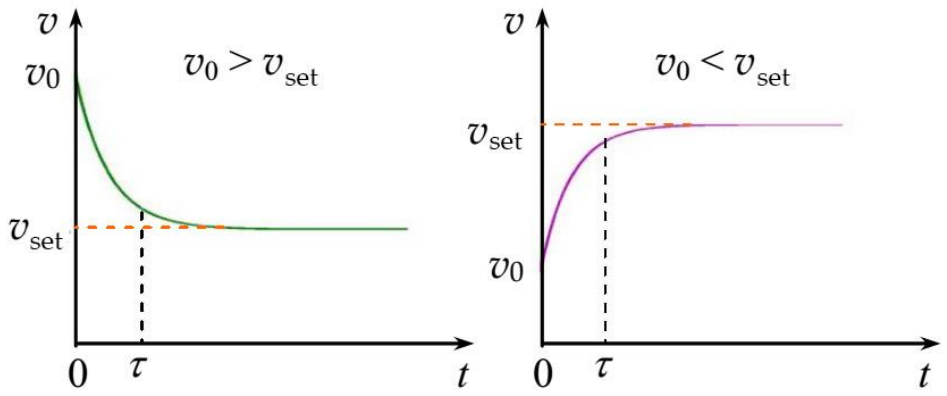

Figure 5.2.

In the present work it is proposed to determine the viscosity coefficient of glycerin. Glycerin belongs to liquids whose viscosity has significant temperature dependence at temperatures close to the room temperature.

In addition, in real experiment we deal with an aqueous solution of glycerin because it absorbs water vapor from the open air. The presence of water greatly affects its density and viscosity. Brief data on the viscosity dependence on temperature and concentration are given in Table 5.1. It makes no sense to measure the glycerin viscosity without knowing its temperature and density (percentage of water abundance).

Table 5.1

Glycerin aqueous solution			
Glycerin concentration, mass percentage	Viscosity η, 10^{-3} Pa·s		
	20 ^{0}C	25 ^{0}C	30 ^{0}C
100	1495.	942	622
99	1194	772	509
98	971	627	423
97	802	521	353
96	659	434	295
95	543	365	248

5.2. Methodology of experiment

The Stokes viscometer is a transparent cylinder filled with glycerin. The diameter of the cylinder is 5 cm, the length is 1 m. There are measuring marks on the wall of the cylinder; distance l between the marks can be measured using a ruler. The upper mark is located slightly below the open surface of glycerin. When the ball passes it, its speed already acquires the setting value.

We measure the time Δt of free fall of the ball between two marks separated by the distance Δl. Then a simple formula can be used to determine the setting speed:

$$v_{set} = \frac{\Delta l}{\Delta t}. \tag{5.17}$$

Let's find out which sizes of balls should be used for measurements.

Task 2. Using the applicability conditions for the Stokes formula (5.2), show that measurements should be carried out using the balls of radius

$$r^3 << \frac{9}{2}\frac{\eta^2}{(\rho-\rho_1)\rho_1 g}. \tag{5.18}$$

Consider a lead ball (ρ = 11.3·10^3 kg/m^3) with a radius of 1 mm. Can it be used to measure viscosity of the 95% glycerin solution at 20 ^{0}C? Take ρ_1 = 1.1·10^3 kg/m^3.

It is also necessary to determine the distance below the open surface of glycerin where the upper mark should be located, so that when the ball passes it its speed $v \approx v_{set}$ (For example, with 5% accuracy). To do that, let's determine the path S covered by the ball in time 3τ with zero initial speed. If we integrate the expression (5.15) over the time interval from 0 to 3τ, we obtain:

$$S(3\tau) = \int_0^{3\tau} v(t)dt = v_{set}\tau\left(\frac{t}{\tau} - 1 + e^{-\frac{t}{\tau}}\right)\Bigg|_0^{3\tau} \approx 2v_{set}\tau \approx \frac{8}{81}gr^4\frac{(\rho-\rho_1)\rho}{\eta^2}.$$

Naturally, a question arises how to carry out experiment in order to determine the viscosity coefficient of an "unknown fluid" (if we have no idea about value of its

viscosity coefficient). Usually a series of measurements η_1, η_2, …, η_n is made and the average value $<\eta>$ is determined.

But such actions are valid only if the criterion of applicability of the Stokes law is fulfilled. Even flawless measurements can result in the improperly accomplished experiment if values η_1, η_2, …, η_n maintain some systematic dependence (regularity), for example, on the ball radius r. In that case, further measurements should be made using smaller balls, increasing the distance from the open surface of the glycerin to the upper mark.

The experiment reliability criterion is the absence of the systematic dependence of η on r; this dependence can only have random nature associated with random errors. Only in this case we may average the results of measurements and draw conclusions about validity of the theoretical postulates.

5.3. Procedure

1. Select 10 balls of different diameters and measure their average diameters using a micrometer. Densities of the material of balls ρ and glycerin ρ_1 are indicated on the experimental setup.

2. If density ρ_1 is not specified, measure it using a hydrometer, having the glycerin previously stirred. Also, determine temperature of the glycerin.

3. Use data from the Table 5.1 and analyze applicability of the Stokes law. Determine the distance below the open surface of glycerin where the upper mark should be located. Use the "worst" values of r and η for calculations, that is the biggest radius among the selected balls and viscosity of the 95% glycerin solution at room temperature. From practical considerations, the upper mark should be located approximately 5 cm below the surface of the liquid.

4. Take the ball with tweezers and gently drop it in the middle of the open surface of glycerin. Measure the time during which the ball passes between two marks using a stopwatch. The eye of the watcher should be at the same level as the corresponding

mark. Measure the distance between the two marks using a ruler. Tabulate all the measured results (Table 5.2).

5. Determine the setting speed of the balls (formula (5.17)) and calculate the viscosity coefficient of glycerin using formula (5.16). Make sure that the obtained values of η do not show a systematic dependence on the radius of the ball. For that purpose build a graph $\eta(r)$.

6. Determine the average value of the glycerin viscosity coefficient $<\eta>$. Considering $\eta_1, \eta_2, \ldots, \eta_n$ as results of direct measurements, calculate the standard error $S_{<\eta>}$ using Table 5.2.

7. Derive a formula to calculate the systematic error:

$$\left(\frac{\sigma_\eta}{\eta}\right)^2 = 4\left(\frac{\sigma_r}{r}\right)^2 + \left(\frac{\sigma_g}{g}\right)^2 + \frac{\sigma_\rho^2 + \sigma_{\rho 1}^2}{(\rho - \rho_1)^2} + \left(\frac{\sigma_t}{t}\right)^2 + \left(\frac{\sigma_l}{l}\right)^2. \qquad (5.19)$$

Calculate the error σ_η .using Table 5.3.

8. Evaluate the experimental error $<\sigma>$ depending on the values of $S_{<\eta>}$ and σ_η. Write the final result noting the density and temperature of the glycerin.

9. Use Table 5.1 to estimate the percentage of water in the glycerin solution.

5.4. Control quiz

1. Viscosity coefficients. Newton's formula for the force of internal friction.

2. Laminar and turbulent flow. Reynolds number.

3. The Stokes law. Conditions of its applicability.

4. Derive the differential equation of the ball’s motion in the boundless viscous liquid. Obtain its solution $v(t)$ and perform the appropriate analysis.

5. What is the idea of the Stokes method for the viscosity determination?

6. Which balls should be used for measurements? Should the material of balls have good wettability?

7. At what distance from the open surface of glycerin should the upper mark be located?

8. What is the reliability criterion for this experiment?

9. How are the experimental errors calculated?

10. Answer the questions from the main text.

Table 5.2.

n	d (mm)	Δt (s)	v_{set} (m/s)	η (Pa·s)	$\eta_i - \langle\eta\rangle$ (Pa·s)	$(\eta_i - \langle\eta\rangle)^2$ (Pa·s)
1						
2						
3						
4						
5						
6						
7						
8						
9						
10						

Parameters for calculations:

Density of material of balls $\rho = 11.3 \cdot 10^3$ kg/m^3

Density of glycerin $\rho_1 =$

Distance between the marks $\Delta l =$

Glycerin temperature $T =$

Table 5.3.

$\sigma_\rho =$ (kg/m^3)	$\sigma_g =$ (m/s^2)
$\sigma_{\rho 1} =$ (kg/m^3)	$\sigma_r =$ (mm)
$\sigma_l =$ (m)	$\sigma_t =$ (s)

Formulas for calculations:

1) $\sum_{i=1}^{10} \eta_i =$ (Pa·s)

2) $<\eta> = \frac{\sum_{i=1}^{10} \eta_i}{10} =$ (Pa·s)

3) $\sum_{i=1}^{10} (\eta_i - <\eta>)^2 =$ $(\text{Pa·s})^2$

4) $S_{<\eta>} = \sqrt{\frac{\sum_{i=1}^{10} (\eta_i - <\eta>)^2}{n(n-1)}} =$ (Pa·s)

5) $\frac{\sigma_\eta}{\eta} \cdot 100\% =$

6) $\sigma_{<\eta>} =$ (Pa·s)

Laboratory work 1-6

Determination of the ratio of the air heat capacity at constant pressure to its heat capacity at constant volume.

Objective: to determine the ratio of heat capacities at constant pressure and at constant volume for the ideal gas applying the first law of thermodynamics.

Equipment: vessel with two tubes and faucets; manometer, pump.

6.1. Theoretical information

Heat capacity *C* is the ratio of the infinitesimal amount of heat δQ received by the system to the corresponding change in the temperature of the system *dT*:

$$C = \frac{\delta Q}{dT}. \qquad (6.1)$$

Specific heat capacity *c* is the heat capacity per unit mass. Molar heat capacity *C* is the heat capacity per one mole of the substance. They are related by the formula

$$C = cM, \qquad (6.2)$$

where *M* is the molar mass of the substance.

Heat capacity is the **<u>functions of the process</u>** – it depends on the conditions of the process through which the energy is transferred to the system. Let's use the first law of thermodynamics to determine the heat capacity:

$$\delta Q = dU + \delta A_{by\_gas} = dU + pdV, \qquad (6.3)$$

where *dU* is the change in the internal energy of the system, δA_{by_gas} is the elementary work done by the system on its surroundings, *p* is the gas pressure, *V* is its volume.

Substituting (6.3) into (6.1) we obtain:

$$C = \frac{dU}{dT} + \frac{pdV}{dT}, \tag{6.4}$$

or, taking into account that for the one mole of an ideal gas

$$U = \frac{i}{2}RT, \tag{6.5}$$

we obtain:

$$C = \frac{i}{2}R + \frac{pdV}{dT}. \tag{6.6}$$

Here R = 8.31 J/mol·K is the universal gas constant; i is the number of degrees of freedom of the gas molecule; i = 3 for a monoatomic molecule, i = 5 for a diatomic molecule, i = 6 for a many-atomic molecule. It is assumed that joining between the atoms in the molecule is rigid.

From equation (6.6), taking into account the equation of state for an ideal gas, one can obtain expressions for the heat capacity at constant volume and heat capacity at constant pressure:

$$C_V = \frac{i}{2}R, \qquad C_P = \frac{i+2}{2}R, \tag{6.7}$$

The ratio of heat capacities at constant pressure and at constant volume $\gamma = \frac{C_P}{C_V}$ plays a significant role in thermodynamics. In particular, it is included in the adiabatic (Poisson) equation, which describes the adiabatic (without transfer of heat between the system and its surroundings) gas expansion

$$pV^{\gamma} = const. \tag{6.8}$$

For the ideal gas, it is easy to determine γ from (6.7):

$$\gamma = \frac{i+2}{i}. \tag{6.9}$$

However, chemical composition of gas is not always known, i.e. the number of degrees of freedom is unknown. Therefore, experimental methods are the way to determine the C_P / C_V for any gas with properties similar to the ideal. One of the simplest methods for the C_P / C_V determination is the Clement-Desormes method. This method uses adiabatic compression and expansion of gas.

The gas contained in the vessel passes through the sequence of three states. Each of these states is characterized by pressure *p*, volume *V* and temperature *T*, respectively. The first state has parameters p_1, V_1, T_1, the second p_2, V_2, T_2, the third p_3, V_3, T_3.

The first state characterizes the gas contained in a closed vessel at room temperature T_1 and pressure p_1 that is slightly higher than the atmospheric pressure.

If the vessel is connected with the atmosphere for a short time, the adiabatic expansion of gas occurs. The gas pressure becomes equal to the atmospheric p_2, and the temperature T_2 lowers due to the rapid expansion of gas. This transition is described by the adiabatic equation (6.8), which, with help of the equation of state for the ideal gas, can be written as:

$$\left(\frac{p_1}{p_2}\right)^{\gamma-1} = \left(\frac{T_1}{T_2}\right)^{\gamma}. \tag{6.10}$$

As a result of the heat exchange with the surroundings, the gas in the closed vessel passes from the second state to the third state. The gas temperature becomes equal to the room temperature $T_3 = T_1$, volume does not change, while the pressure p_3 increases. This transition is described by Charles's law:

$$\frac{p_3}{p_2} = \frac{T_3}{T_2} = \frac{T_1}{T_2}. \tag{6.11}$$

Solving together equations (6.10) and (6.11), we find:

$$\gamma = \frac{\ln p_1 - \ln p_2}{\ln p_1 - \ln p_3}. \tag{6.12}$$

In the formula (6.12), according to the experimental conditions, p_2 is the atmospheric pressure, and the pressures p_1 and p_3 are slightly higher. If the difference between the gas pressure in the vessel and the atmospheric pressure is measured by a liquid manometer, then the pressure difference is determined by the heights h_1 and h_2 of liquid (water) columns in the manometer tubes, that is, $p_1 = p_2 + \rho g h_1$ and $p_3 = p_2 + \rho g h_2$, where ρ is the density of the liquid.

Because $\rho g h_1$ and $\rho g h_2$ are small compared to p_2, the logarithms of pressure can be expressed as follows:

$$\ln(p_2 + \rho g h_1) = \ln p_2 \left(1 + \frac{\rho g h_1}{p_2}\right) \approx \ln p_2 + \frac{\rho g h_1}{p_2}, \tag{6.13}$$

$$\ln(p_2 + \rho g h_2) = \ln p_2 \left(1 + \frac{\rho g h_2}{p_2}\right) \approx \ln p_2 + \frac{\rho g h_2}{p_2}. \tag{6.14}$$

After substituting (6.13) and (6.14) into (6.12) we obtain:

$$\gamma = \frac{h_1}{h_1 - h_2}. \tag{6.15}$$

6.2. Experimental setup

The device used in the present work is a glass vessel V (Fig. 6.1) filled with air and tightly plugged. The vessel is large enough, so changes in volume of the gas in the manometer tubes may be neglected. There are two tubes passing through the plug: one of them is connected to the liquid manometer M (the liquid in the manometer is water), the second one – with the combined faucet K. In the first positions of K the volume of the vessel is connected to the surrounding atmosphere, and in the second position – with a pump (P). The faucet K can be switched very quickly, so that the process may be considered as adiabatic.

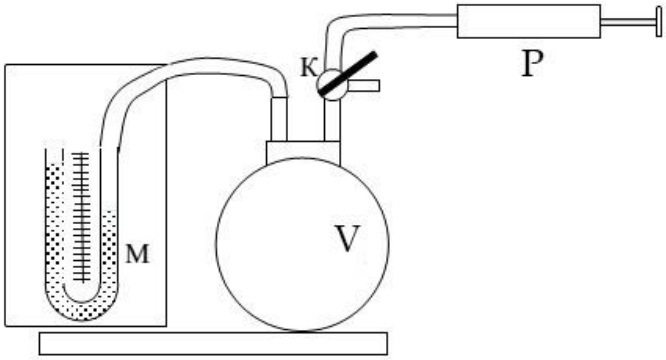

Figure 6.1

6.3 Procedure

When getting acquainted with the experimental setup, pay attention to the operation of the faucet K. Initially the faucet must be in the position when the volume of the vessel is isolated from the atmosphere and connected to the pump.

1. Pump the air in the vessel until the difference of water levels in manometer reaches 7-8 cm. Due to the compression done by external force the air temperature in the vessel slightly increases. Wait for 3-5 minutes until the compressed and heated air cools down to the room temperature (the levels in manometer stop changing). Then record the difference of water levels in the manometer h_1.

2. For an instant turn the faucet K connecting the volume of the vessel with the atmosphere to equalize water levels in the manometer and quickly turn the faucet off. If this is done quickly enough, the heat transfer between the air in the vessel and the atmosphere does not have time to occur, that is, the air expansion is adiabatic.

While expanding, the air in the vessel does work against forces of external pressure by the cost of its internal energy, so it is cooling down. After that, the air within the vessel is heated back to the room temperature. The air pressure rises and the water level in the manometer's tube connected with the vessel starts to lower. Wait for 2-3 minutes until the levels in manometer stop changing and record the difference of levels h_2.

3. Repeat 8 times actions described in the items 1-2. Tabulate the obtained results (Table 6.1).

4. Calculate γ for each experiment using the formula (6.15) and find its average value.

5. Calculate the standard error $S_{<\gamma>}$ and relative error ε. Tabulate the obtained results.

6. Write the final result in the form $\gamma = <\gamma> \pm t_{\alpha,n} S_{<\gamma>}$.

Take the confidence level $\alpha = 0.8$ for the Student's t-test.

6.4. Control quiz

1. How are the specific and molar heat capacities interrelated?

2. How larger is the value of molar heat capacity at constant pressure than the value at constant volume?

3. Explain the essence of the first law of thermodynamics.

4. Give definition of the quasistatic thermodynamic processes and the adiabatic process and plot them on thermodynamic diagrams.

5. Derive relation (6.10) from the relation (6.8).

6. How will the delay when switching the faucet K affect the result of experiment?

7. How will the water vapor in the air within the vessel affect the result of experiment?

Table 6.1.

n	Difference of water levels in the manometer		γ	$(\gamma_i - <\gamma>)^2$
	h_1, cm	h_2, cm		
1				
2				
3				
4				
5				
6				
7				
8				
$t_{\alpha,n}$ =	$\sum_{i=1}^{8}\gamma_i =$			$\sum_{i=1}^{8}(\gamma_i - <\gamma>)^2 =$
$\varepsilon = \frac{S_{<\gamma>}}{<\gamma>}\cdot 100\% =$	$<\gamma> = \frac{\sum_{i=1}^{8}\gamma_i}{8} =$			$S_{<\gamma>} = \sqrt{\frac{\sum_{i=1}^{8}(\gamma_i - <\gamma>)^2}{8\cdot 7}} =$

Final result:

γ = _____

Laboratory work 1-7

Study of the laminar flow of gas through the thin tube

Objective: experimental verification of the Poiseuille law; determination of the air viscosity coefficient.

Equipment: capillary, gas-meter, dehumidifier, manometer, stopwatch

7.1. Theoretical information

Let us consider the steady flow of a viscous incompressible fluid along a rectilinear cylindrical tube of radius *R*. At low velocities the laminar (layered) flow is observed: the fluid flows in parallel layers that slide past one another without mixing. In our case, the layers have form of infinitely thin coaxial cylindrical surfaces embedded one into another. Axis of the set of the cylinders coincides with the axis of the tube.

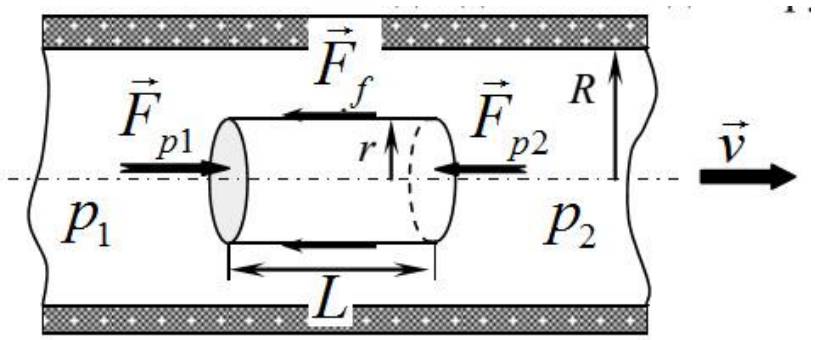

Figure 7.1

Consider an imaginary cylindrical volume of fluid of radius *r* and length *L*, as shown in Fig. 7.1. Let us denote the pressure near its ends as p_1 and p_2. The force $F_p = p\pi r^2$ is exerted on the ends of the cylinder due to pressure, and the pressure drop across the cylinder results in the net force $F_p = (p_1 - p_2)\pi r^2$. As the flow is steady, the pressure force is balanced by the force of internal friction (shear force) F_f exerted on

the lateral surface of the cylinder by the outer layers of the fluid. Thus, the condition of steady flow of the considered volume of fluid is:

$$F_p - F_f = 0. \tag{7.1}$$

As the fluid is incompressible and the flow is steady, the velocity of fluid within each layer is constant and determined only by its radial distance r from the center of the tube. The center is moving fastest while the layers closer to the walls of the tube are moving slower. The fluid in the faster layer is pulled in the negative direction by the fluid in the slower layer, while the slower layer is pulled in the positive direction by the faster layer, so the shear force appears between the contacting layers. This force of internal friction is determined by the Newton's formula:

$$F_f = -\eta \left| \frac{dv}{dr} \right| S, \tag{7.2}$$

where η is the coefficient of dynamic viscosity of the fluid; $\left| \frac{dv}{dr} \right|$ is the absolute value of the velocity gradient, which determines the change in the velocity in the direction r (radius of the tube); S is the surface area of the contacting layers. The negative sign is in there because the velocity $v(r)$ decreases with the distance from the axis of the tube, that is $dv/dr < 0$. Then,

$$F_f = -2\pi r L \eta \left| \frac{dv}{dr} \right|.$$

The condition of the steady flow can be written as:

$$\pi r^2 (p_1 - p_2) + 2\pi r L \eta \left| \frac{dv}{dr} \right| = 0. \tag{7.3}$$

Integrating this equality, we find:

$$v(r) = \frac{r^2 (p_1 - p_2)}{4L\eta} + C,$$

where C is the integration constant determined by the boundary conditions of the problem. Note that the velocity must be zero at $r = R$, since the fluid "clings" to the tube walls; this allows us to determine C. We obtain:

$$v(r) = \frac{(p_1 - p_2)}{4L\eta}(R^2 - r^2). \tag{7.4}$$

Thus, the fluid velocity has quadratic dependence on the radius and is maximal at the axis of the tube, where it is equal to

$$v(r = 0) = \frac{(p_1 - p_2)}{4L\eta}R^2.$$

The volumetric flow rate Q, (also known as volume velocity) is the volume of fluid which passes through the cross-section of the tube per unit time. To determine the volumetric flow rate, let's consider a ring section with internal radius r and outer radius $r + dr$, which is oriented perpendicular to the flow of fluid. Every second a volume dV passes throughout this section, and $dQ = \frac{dV}{dt} = v(r)2\pi r dr$. By integrating the last expression we obtain the volumetric flow rate:

$$Q = \int_0^R v(r)2\pi r dr = \pi\frac{(p_1 - p_2)}{2L\eta}\int_0^R (R^2 - r^2)dr = \pi\frac{(p_1 - p_2)}{8L\eta}R^4. \tag{7.5}$$

Formula (7.5) is the **<u>Poiseuille law</u>**, which allows to determine the dynamic viscosity of the fluid by means of experimental data on its volumetric flow rate.

The Poiseuille law is obtained by assuming that the flow of incompressible fluid is laminar. However, as the flow velocity increases, the motion becomes turbulent and the layers begin to mix. Under the condition of turbulent motion, the velocity at each point quickly changes its value and direction, only the average velocity value is constant.

The nature of the fluid flow is determined by the dimensionless Reynolds number:

$$\mathrm{Re} = \langle v \rangle \frac{R\rho}{\eta}, \tag{7.6}$$

where $\langle v \rangle$ is the average velocity of the flow, R is the radius of the tube, ρ is the density of the fluid, η is its dynamic viscosity. In smooth tubes of constant circular cross-section transition from laminar to turbulent flow occurs at $\mathrm{Re}_{cr} \approx 1000$. Therefore, in order to apply the Poiseuille law, it is necessary to ensure the inequality $\mathrm{Re}_{cr} < 1000$ with sufficient reliability. Moreover, it is necessary to ensure the experimental conditions such that compressibility of the fluid may be neglected. A liquid may be considered as incompressible almost always, but a gas is incompressible only if the pressure drop along the tube is much smaller than the pressure itself. In our case, the gas pressure is equal to the atmospheric pressure (10^3 mmH_2O), while the pressure drop is ~10 mmH_2O, that is, ~ 1% of the atmospheric pressure.

The formula (7.5) is valid for those sections of the tube where the steady flow with characteristic velocity distribution (7.4) is set. If the gas is moving from a large vessel into a thin tube, the laminar flow is set not immediately, but when the distance a is passed:

$$a \approx 0.2R \cdot \mathrm{Re}. \tag{7.7}$$

The Poiseuille law gives reliable results only if the length of the tube is substantially longer $L >> a$. In order to fulfill this condition it is necessary to use very thin tubes (capillaries) in the experiment.

In order to verify experimentally the Poiseuille law, it is necessary to investigate how the volumetric flow rate Q depends on the pressure drop $\Delta p = p_1 - p_2$. Typically, a liquid U-shaped manometer is used to measure the pressure difference. In this case $\Delta p = \rho_0 g \Delta h$, where ρ_0 is the density of the liquid in the manometer; Δh is the difference of levels in the manometer's tubes.

From Poiseuille equation,

$$Q = \frac{\pi \rho_0 g R^4}{8L\eta} \Delta h, \tag{7.8}$$

it is evident that the dependence $Q(\Delta h)$ is linear in the case of laminar flow. When the turbulence arises, the linearity is violated: the pressure difference Δh increases faster than the flow rate (Fig. 7.2).

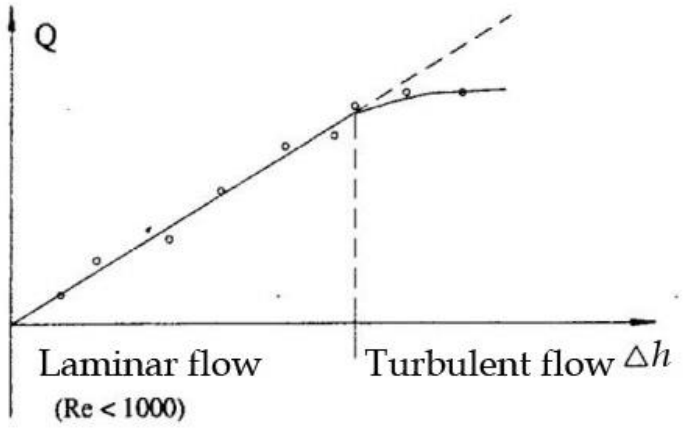

Figure 7.2

The slope of the linear part of the $Q(\Delta h)$ plot

$$k = \frac{\pi \rho_0 g R^4}{8 L \eta} \tag{7.9}$$

allows to determine the viscosity of the gas η, while the point of bend gives the critical value of the Reynolds number (Re_{cr}), which corresponds to the transition from laminar to turbulent flow. If the experimental values $(Q, \Delta h)$ with the experimental error taken into account fit a straight line in the region of laminar flow, then it is the confirmation of fairness of the Poiseuille law.

7.2. Experimental setup

The gas meter used in the present work is a glass vessel (Fig. 7.3) partially filled with water and tightly plugged. The water from the gas meter can be drained into a measuring cup 2 by opening the faucet K. The air contained in the gas meter is connected to the atmosphere with a capillary tube 3. The pressure drop Δp across the capillary tube is measured with the water manometer 4.

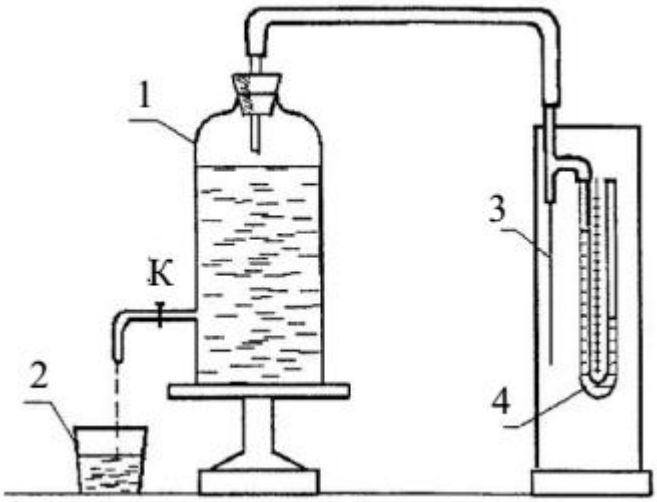

Figure 7.3

7.3. Procedure

1. Get acquainted with the experimental setup. Slowly open the faucet K and carefully monitor the manometer. Adjust the drain of water from the gas meter so that $\Delta h \approx 1$ cm. Measure the volumetric flow rate Q. To do that, measure the time t during which V = 250 ml of water is drained. Calculate the volumetric flow rate with the formula $Q = \frac{V}{t}$. Measurement of the volume V should be started not immediately when opening the faucet, but with some delay, when the difference of water levels in the manometer is set.

2. Perform the same measurements, gradually increasing the pressure difference, for example, with a step of 0.5 mmH_2O. The experimental dependence $Q(\Delta h)$ should contain not less than 10 experimental points. Tabulate the measured results (Table 7.1).

3. Write parameters of the experimental setup, which are indicated at the workplace, as well as the air temperature:

Air density ρ = 1,293 kg/m^3 Water density ρ_0 = ...

Radius of the capillary R = : Length of the capillary L =

Air temperature t ^{0}C =

7.4. Processing of measurements

1. Graph the dependence $Q(\Delta h)$ on a sheet of plotting paper.

2. Determine the slope k of the linear part of the $Q(\Delta h)$ plot and calculate the viscosity of the air η using the formula 7.9.

3. Using the formula 7.6, calculate the Re value for the region of transition between the laminar and turbulent flow. The average flow speed is determined with the formula: $\langle v \rangle = Q/S_c$, where S_c is the cross-sectional area of the capillary. Compare the obtained result with the critical value of Reynolds number Re_{cr} given above.

4. Apply a correlation analysis of the experimental data $Q(\Delta h)$ corresponding to the laminar flow region (see "Correlation Analysis" Appendix). Make conclusion on the validity of the Poiseuille law according to the results of the laboratory work. Compare the values of the slope k obtained graphically and with the Ordinary Least Squares (OLS) method (Formula a4).

Table 7.1

n	Time t, s	Q, ml/s	Q, m^3/s	Δh, m
1				
2				
3				
4				
5				
6				
7				
8				

Determination of the slope

a) graphically

$$k = \frac{\Delta Q}{\Delta(\Delta h)} =$$

b) with OLS

$$k_{OLS} =$$

Determination of the viscosity coefficient and the Reynolds number

a) using the slope value:

$$\eta = \frac{\pi\rho_0 g R^4 / 8L}{k} =$$

b) using the k_{OLS} value:

$$\eta = \frac{\pi\rho_0 g R^4 / 8L}{k_{OLS}} =$$

$$\mathrm{Re} = \frac{<v>\rho R}{\eta} = \frac{Q\rho R}{\eta S_c} =$$

7.5. Control quize

1. What is the nature of viscosity? What physical processes generate the viscosity of gases?

2. How to derive the formula of the gas viscosity coefficient? How does this coefficient depend on the temperature?

3. Explain the Newton's formula for the internal friction force.

2. Derive the Poiseuille equation.

3. Laminar and turbulent flow. Reynolds number.

4. Analyze the conditions of validity of the Poiseuille law.

5. How to provide the experimental verification of the Poiseuille law?

6. How are the air viscosity coefficient and critical value of the Reynolds number determined in the present work?

Laboratory work 1-9

Study of the Boltzmann distribution law

Objective: experimental verification of the Boltzmann distribution law for small particles suspended in liquid.

Equipment: narrow cylindrical vessel with transparent liquid where small particles are suspended; light source; photodetector; photocurrent measurer; ruler

9.1. Theoretical information

In the state of thermal equilibrium, the velocity and coordinates distribution of identical particles is determined solely by the energy of the particles E and the temperature of the system T (here T is the absolute temperature in Kelvins). In order to write this distribution law, called the Maxwell-Boltzmann distribution, we introduce a Cartesian coordinate system x, y, z to determine the position of the particle, while the velocity of the particle is characterized by its components v_x, v_y, v_z along the x, y, z axes.

In such case, the distribution law can be written as:

$$dn_{x,y,z,v_x,v_y,v_z} = A \cdot e^{-\frac{E}{k_B T}} dxdydzdv_x dv_y dv_z, \qquad (9.1)$$

where dn_{x,y,z,v_x,v_y,v_z} is the number of particles whose coordinates and components of velocity lie within intervals (x; $x + dx$), (y; $y + dy$), (z; $z + dz$), (v_x; $v_x + dv_x$), (v_y; $v_y + dv_y$), (v_z; $v_z + dv_z$), A is the normalizing factor, $k_B = 1.38 \cdot 10^{-23} J/K$ is the Boltzmann constant, E is the total energy of the particle, which depends on its coordinates and velocity.

If we are interested in the distribution $dn_{x,y,z}$, which depends only on the coordinates of the particles, while their velocities can take any random values, then we

need to integrate the distribution (9.1) with respect to velocity components. To do that, we assume that external forces acting on the particles are conservative. Then we can write the total energy E as the sum of kinetic and potential energies

$$E = E_K(v_x, v_y, v_z) + U(x, y, z)$$

and substitute into the formula (9.1), separating it into parts which depend on the coordinates and velocity components:

$$dn_{x,y,z,v_x,v_y,v_z} = A \cdot e^{-\frac{U(x,y,z)}{k_B T}} dxdydz \cdot e^{-\frac{E_K(v_x,v_y,v_z)}{k_B T}} dv_x dv_y dv_z .$$

Let us perform integration with respect to all possible values of the velocity components, that is, let the bounds of integration be from $-\infty$ to $+\infty$:

$$dn_{x,y,z} = \int\int\int_{-\infty}^{+\infty} dn_{x,y,z,v_x,v_y,v_z} = A \cdot e^{-\frac{U(x,y,z)}{k_B T}} dxdydz \cdot \int\int\int_{-\infty}^{+\infty} e^{-\frac{E_K(v_x,v_y,v_z)}{k_B T}} dv_x dv_y dv_z .$$

The triple integral of the right-hand part of this formula does not depend on the coordinates; let's combine it with the normalizing factor A and rewrite the result of the integration as:

$$dn_{x,y,z} = A' \cdot e^{-\frac{U(x,y,z)}{k_B T}} dxdydz , \qquad (9.2)$$

where A' is the new normalizing factor equal to

$$A' = \cdot \int\int\int_{-\infty}^{+\infty} e^{-\frac{E_K(v_x,v_y,v_z)}{k_B T}} dv_x dv_y dv_z ,$$

and $dn_{x,y,z}$ is the number of particles whose coordinates lie within intervals (x; $x + dx$), (y; $y + dy$), (z; $z + dz$), while the velocities are arbitrary. The distribution law expressed by the formula (9.2) is called the Boltzmann distribution. Let us apply the distribution (9.2) to an ensemble of identical particles of mass m suspended in a liquid at temperature T. We assume that the liquid is contained inside a vertical cylindrical vessel. The position of the particle in the liquid column is characterized by the height

h measured from the bottom of the vessel. The origin of the Cartesian coordinate system x, y, z is chosen at the bottom of the vessel, the z axis is directed vertically upward ($z = h$), and the x and y axes are directed horizontally, as shown in Fig. 9.1.

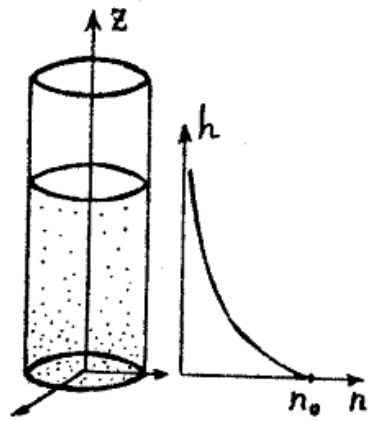

Figure 9.1.

The net force $F = mg - F_b$ is exerted on the particle in the liquid, where $mg = \rho\tau g$ is the gravitational force (ρ is the density of the particle, τ is its volume), $F_b = \rho_1\tau g$ is the buoyant force given by the Archimedes' principle (ρ_1 is the density of the liquid, τ is the volume of the particle).

Since the buoyant force is constant, the particles in the gravitational field have the potential energy

$$U = F \cdot z = \tau(\rho - \rho_1)gh .$$

Then the distribution (9.2) takes form:

$$dn_{x,y,z} = A' \cdot e^{-\frac{\tau(\rho-\rho_1)gh}{k_B T}} dxdydz . \qquad (9.3)$$

The Boltzmann distribution is valid for any particles, so it can be applied to heavy particles as well. If, for example, sand particles are considered, it is evident that they will be located within some layer near the bottom of the vessel. That is the consequence of the Boltzmann distribution law, since in the case of large masses of particles their potential energy is so large ($U >> k_B T$) that the value under exponent

function in (9.2) changes very rapidly with height. Therefore, the distribution function (9.2) is practically zero outside the layer of sand.

In order to prevent the heavy particles from deposition at the bottom and to provide their distribution within a sufficiently thick layer, it is necessary to make their potential energy sufficiently small. It can be achieved by placing particles in a liquid with density close to the density of the material of particles. Also, the particles should be small enough.

Let us introduce the volume density (concentration) of particles *n*, which is equal to the number of particles per unit volume $n = \frac{dn_{x,y,z}}{dV}$, where $dV = dxdydz$ is the elementary volume. Then the Formula (9.3) can be written in the form

$$dn(h) = A' \cdot e^{-\frac{\tau(\rho-\rho_1)gh}{k_B T}} \tag{9.4}$$

Let us find *A'*. To do that, let's introduce the value n_0 which is the concentration of particles near the bottom of the vessel. Assuming $h = 0$ in the Formula (9.4), we obtain that $A' = n_0$. Thus, the distribution of concentration of particles with height can be finally written as:

$$dn(h) = n_0 \cdot e^{-\frac{\tau(\rho-\rho_1)gh}{k_B T}} . \tag{9.5}$$

This formula is the direct consequence of the Boltzmann distribution law, so its confirmation simultaneously means the experimental verification of the Boltzmann distribution law. We should use any method for determining the concentration of particles and study of the dependence of the measured concentration on the altitude.

An optical method for determining the concentration of particles is used in the present work. The essence of the method is based on the fact that the intensity of light which passes through the layer of transparent liquid with non-transparent particles decreases due to absorption and scattering by particles. The higher is the concentration of the particles the light encounters on its way, the lower is the output light intensity.

Therefore, by the decrease in intensity of light we can determine the concentration of the particles. Because this method of determining the concentration of particles is indirect (we directly determine not the concentration itself, but the intensity of light associated with it), we need a formula that relates the concentration of particles *n* with the intensity of light *I*. Consider Figure 9.2a. It depicts a parallel beam of light passing through a flat layer of liquid with particles, which is located between two transparent walls. I_{in} is the intensity of the incident light, I_{out} is the intensity of the output light.

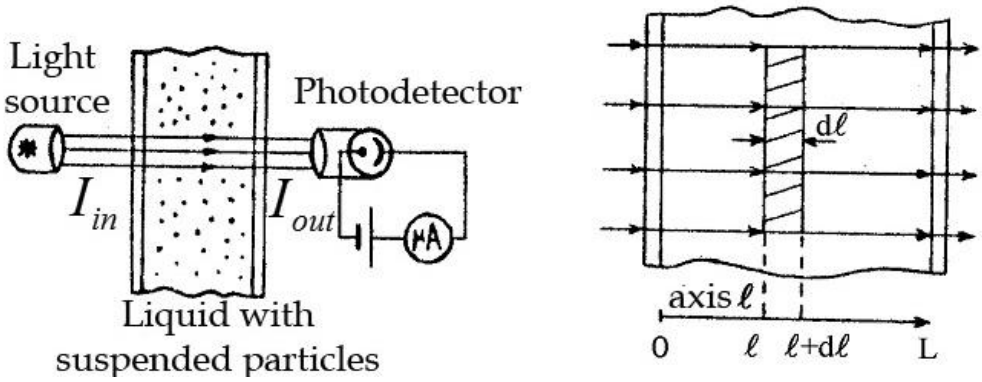

a) b)

Figure 9.2.

The incident light first passes through the first wall, where its intensity decreases due to partial reflection, possible dissipation and some absorption in the material of the wall. Let α_1 be the corresponding attenuation coefficient. Then the intensity of light entering the liquid is equal to $I_1 = \alpha_1 I_{in}$. Let us introduce the coordinate *l*, which is measured along the perpendicular from the first wall to the second (Fig. 9.2, b). Consider the intensity of light in the liquid as a function of coordinate *I*(*l*). It is clear that $I(0) = \alpha_1 I_{in}$. On a small interval from *l* to *l* + *dl* the light is scattered on particles contained within the shaded volume (Fig. 9.2, b). The value of this volume is equal to $S \cdot dl$ (*S* is the cross-sectional area of the beam of light), while the number of particles contained therein is equal to $n \cdot S \cdot dl$. This number is small because *dl* is small. Assume that during the light scattering on one particle its intensity *I* decreases α times, where α is a small factor. That is, the intensity of the scattered light becomes equal to αI. It is clear that during scattering on $n \cdot S \cdot dl$ particles the total intensity of the scattered light will be equal to $\alpha I \cdot n \cdot S \cdot dl$ (we suggest that the particles practically do not overlap

within the path of the light beam because their number is small). This value is nothing but the decrease in intensity *dI* on the interval *dl*:

$$dI = -\alpha I \cdot n \cdot S \cdot dl \tag{9.6}$$

(the negative sign is there because *I* decreases as *l* increases, i.e. $dI < 0$ if $dl > 0$). The equation (9.6) is a differential equation of variables *l* and *I*, which can be easily separated. To do that, let's divide the two sides of the relation (9.6) by *I*:

$$\frac{dI}{I} = -\chi dl,$$

where $\chi = \alpha n S$. Integrating the both parts of this equality, we obtain:

$$\ln I = -\chi l + C,$$

where C is the integration constant. Now we can find the dependence *I*(*l*):

$$I(l) = C_1 \cdot e^{-\chi l},\ C_1 = e^C.$$

From the condition $I(0) = \alpha_1 I_{in}$ we find that $C_1 = \alpha_1 I_{in}$, and

$$I(l) = \alpha_1 I_{in} \cdot e^{-\chi l}.$$

This formula describes the exponential decrease of the light intensity as it passes through the liquid. Let us use it to determine the intensity of light at the inner edge of the second wall, that is, at $l = L$ (where *L* is the thickness of the liquid layer):

$$I(L) = \alpha_1 I_{in} \cdot e^{-\chi L}.$$

The light must also pass through the second wall. It loses again a fraction of its intensity. By denoting the corresponding attenuation coefficient as α_2, let's find the final intensity of the output light:

$$I = \alpha_1 \alpha_2 I_{in} \cdot e^{-\chi L}.$$

We can write this formula in the form of the dependence of *I* on *n*:

$$I = I_0 \cdot e^{-\beta n}, \tag{9.7}$$

where $I_0 = \alpha_1 \alpha_2 I_{in}$, $\beta = \alpha SL$. The physical meaning of the value I_0 is easy to determine: if $n = 0$ we have $I_0 = I(0)$. Thus, I_0 is the intensity of light passing through the layer of the pure liquid.

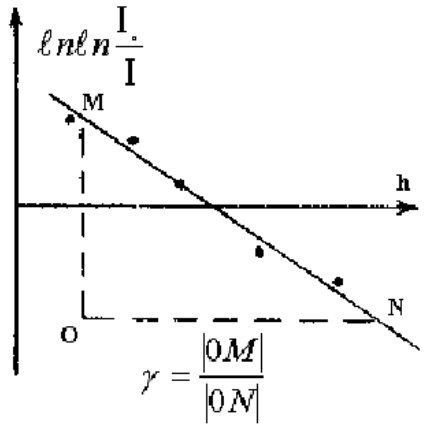

Figure 9.3

In order to measure the intensity of the output light, we can use a photovoltaic light receiver attached to a measuring device, for example, to a μ-ammeter (see Fig. 9.2a). We consider the device readings *i* to be proportional to the intensity of light *I*. Let us introduce the corresponding conversion factor *a*. Then $i_0 = aI_0$, $i = aI$ are the device readings corresponding to the intensities I_0 and *I*. Multiplying the both sides of (9.7) by *a*, we obtain the final working formula that relates *I* and *n*:

$$i = i_0 \cdot e^{-\beta n}. \qquad (9.8)$$

From (9.8) we obtain:

$$n = \frac{1}{\beta} \ln \frac{i_0}{i}.$$

Substituting *n* into the formula (9.5), we obtain:

$$\ln \frac{i_0}{i} = \beta n_0 \cdot e^{-\frac{\tau(\rho - \rho_1) gh}{k_B T}}.$$

It is convenient to represent this dependence in the linear form. To do that, we take logarithm:

$$\ln\left(\ln\frac{i_0}{i}\right) = \ln\beta n_0 - \frac{\tau(\rho-\rho_1)gh}{k_B T}. \qquad (9.9)$$

Thus, the plot of the dependence of $\ln\left(\ln\frac{i_0}{i}\right)$ on h (see Fig. 9.3) must be a straight line with a slope equal to $\gamma = \frac{\tau(\rho-\rho_1)g}{k_B T}$. By defining γ as shown in Fig. 9.3, one can calculate the Boltzmann's constant:

$$k_B = \frac{\tau(\rho-\rho_1)g}{\gamma T}. \qquad (9.10)$$

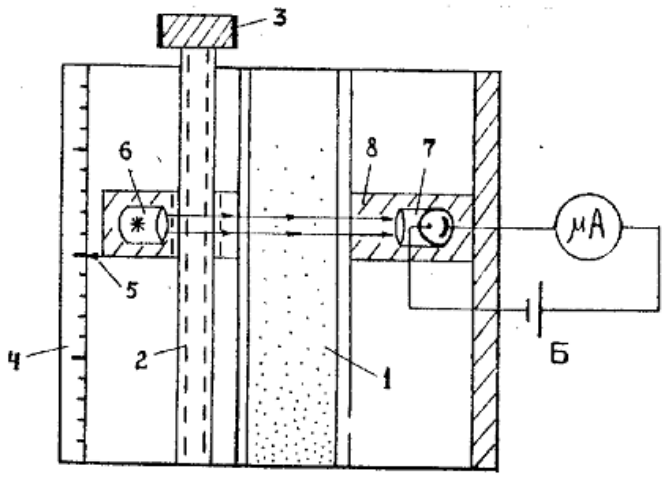

Figure 9.4.

1-vessel with the liquid in which small particles are suspended, 2-micrometric screw, 3-handle of the micrometer screw, 4-scale, 5-mark, 6-light source, 7-photodetector, 8-metal stand, B-battery.

9.2. Description of the experimental setup

A simplified scheme of the experimental setup is shown in Fig. 9.4.

The light source and photodetector (for simplicity, photodetector is shown as a photocell on the diagram) are fixed on the metal stand 8. By rotating the handle 3 of the micrometric screw 2 the stand can be moved, which allows the experimental study of the dependence of photocurrent *i* on the height *h*. The height *h* is measured using the scale 4 with marks 5. It may be considered that there are no suspended particles in the

top part of the vessel, so the current i_0 can be measured, which is proportional to the intensity of light that has passed through the layer of pure liquid.

9.3 Procedure

1. Turn on and adjust the experimental setup, perform measurements according to the instruction.

2. Tabulate the measured results (Table 9.1). Write the values of temperature t^0 (degrees Celsius), density of the liquid ρ_1, density of the material of particles ρ, diameter of the particles d.

9.4. Processing of the experimental results

1. Calculate $\ln\left(\ln\frac{i_0}{i}\right)$ for every value of the photocurrent i measured and tabulate the obtained results (i_0 is the highest current value).

2. Using the tabulated data graph the dependence of $\ln\left(\ln\frac{i_0}{i}\right)$ on h on a sheet of plotting paper. That is, plot the experimental points and draw a straight line closest to all the experimental points using a ruler.

3. Calculate the slope of the line γ (see Figure 9.3) and use the formula (9.10) to define the Boltzmann constant ($T = t^0 + 273$; $g = 9.8$ m/s^2).

4. Apply formulas from the "Correlation analysis" appendix to make conclusion about the fairness of the Boltzmann distribution law.

Table 9.1.

Height h, 10^{-2} m														
i														
i_0/i														
$\ln\left(\ln\frac{i_0}{i}\right)$														

t^0 (^{0}C) =	ρ_1 (kg/m^3) =	d (m) =	i_0 =	k_B = (experiment)
T (K) =	ρ (kg/m^3) =	τ (m^3) =	γ (m^{-1}) =	k_B = (theory)

9.5 Control quiz

1. Explain the physical meaning of the distribution function. What information is given by the Maxwell-Boltzmann distribution law?

2. Write the Boltzmann distribution law.

3. Derive the formula for the particles concentration distribution with respect to height.

4. Derive the law of decreasing of the intensity of light in a non-transparent liquid.

5. What is the essence of the method for determining the particles concentration, which is used in this work?

6. How is the Boltzmann distribution law verified in the present work?

7. How can the Boltzmann constant be determined using the experimental data?

8. Explain why small particles whose density is close to the liquid density should be used to verify the Boltzmann distribution law.

9. Derive the formula for finding the height h, at which the particles concentration falls to (a) 50%; (b) 95%; (c) 99.9% comparing to n_0. In the case (b), calculate the mass and size of sand particles in water, considering $\rho = 2\rho_1$, which are necessary to observe a column of suspended particles of height h = 10 cm.

Appendix: Correlation Analysis

References: "The Method of Least Squares" by Steven J. Miller, Department of Mathematics and Statistics, Williams College, Williamstown, MA 01267

Often in the real world one expects to find linear relationships between variables. For example, the force of a spring linearly depends on the displacement of the spring: $y = kx$ (here y is the force, x is the displacement of the spring from rest, and k is the spring constant). To test the proposed relationship, researchers go to the lab and measure what the force is for various displacements. Thus they assemble a set of data of the form (x_i, y_i).

Unfortunately, it is extremely unlikely that we will observe a perfect linear relationship. There are two reasons for this. The first is experimental error; the second is that the underlying relationship may not be exactly linear, but rather only approximately linear due to the statistical nature of the phenomenon (see Figure a1).

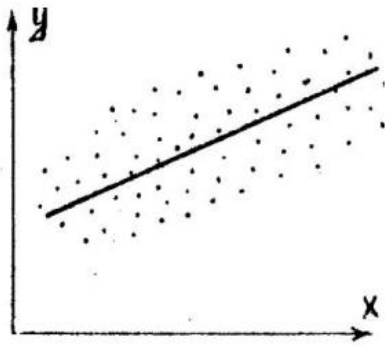

Figure a1.

The Method of Least Squares is a procedure, requiring just some calculus and linear algebra, to determine what the "best fit" line is to the data. Let us quantify what we mean by the "best fit". If we believe that the dependence $y = f(x)$ is linear $y = kx + b$, or if the dependence is transformed into linear, for example, by taking the logarithm (for example, if $y = ax^n$, then $\ln y = \ln a + n\ln x$, and $\ln y$ ($\ln x$) is the linear dependence), then $y - (kx + b)$ should be zero. Thus given observations

$$\{(x_1, y_1), \ldots, (x_n, y_n)\}, \tag{a1}$$

we look at

$$\{y_1 - (kx_1 + b), \ldots, y_n - (kx_n + b)\}. \tag{a2}$$

The mean should be small (if it is a good fit), and the sum of squares of the terms will measure how good of a fit we have.

We define

$$E(k,b) = \sum_{i=1}^{n} \left(y_i - (kx_i + b) \right)^2 . \tag{a3}$$

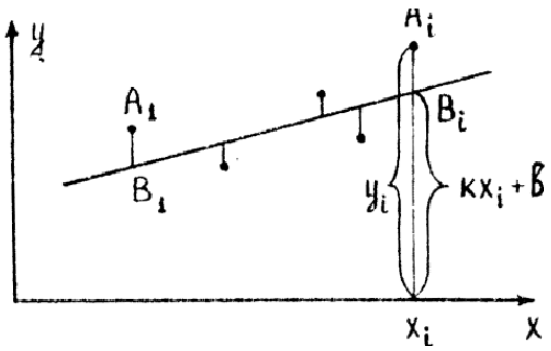

Figure a2.

$E(k, b)$ is the measure of deviation of the experimental points (x_i, y_i) from the straight line (see Figure a2). Large errors are given a higher weight than smaller errors (due to the squaring). Thus our procedure favors many medium sized errors over a few large errors.

Note that the error is a function of two variables, the unknown parameters k and b. The goal is to find values of k and b that minimize the error. In multivariable calculus we learn that this requires us to find the values of (k, b) such that the gradient of E with respect to our variables vanishes; thus we require

$$\frac{\partial E}{\partial k} = 2k \sum_{i=1}^{n} x_i^2 + 2b \sum_{i=1}^{n} x_i - 2 \sum_{i=1}^{n} x_i y_i = 0;$$

$$\frac{\partial E}{\partial b} = 2k \sum_{i=1}^{n} x_i + 2bn - 2 \sum_{i=1}^{n} y_i = 0.$$

If we solve the system of these two equations, we obtain:

$$k = \frac{2\sum_{i=1}^{n} x_i y_i - \left(\sum_{i=1}^{n} x_i\right)\cdot\left(\sum_{i=1}^{n} y_i\right)}{n\sum_{i=1}^{n} x_i^2 - \left(\sum_{i=1}^{n} x_i\right)^2};$$

$$b = \frac{\left(\sum_{i=1}^{n} x_i^2\right)^2\cdot\left(\sum_{i=1}^{n} y_i\right) - \left(\sum_{i=1}^{n} x_i\right)\cdot\left(\sum_{i=1}^{n} x_i y_i\right)}{n\left(\sum_{i=1}^{n} x_i^2\right) - \left(\sum_{i=1}^{n} x_i\right)^2}. \qquad \text{(a3)}$$

Let us denote

$$< x >= \frac{1}{n}\sum_{i=1}^{n} x_i\ ; \qquad < y >= \frac{1}{n}\sum_{i=1}^{n} y_i\ ; \quad < x^2 >= \frac{1}{n}\sum_{i=1}^{n} x_i^2\ ; \quad < y^2 >= \frac{1}{n}\sum_{i=1}^{n} y_i^2\ ;$$

$$< xy >= \frac{1}{n}\sum_{i=1}^{n} x_i y_i\ ; \quad S_x^2 =< x^2 > - < x >^2 ; \qquad S_y^2 =< y^2 > - < y >^2 ;$$

$$S_{xy} =< xy > - < x >< y >,$$

then the expressions (a3) can be written in a more convenient form:

$$k = \frac{S_{xy}}{S_x^2}; \qquad b = \frac{S_x^2 < y > - S_{xy} < x >}{S_x^2}; \qquad y - < y >= \frac{S_{xy}}{S_x^2}(x - < x >). \qquad \text{(a4)}$$

The measure of the linear correlation between two variables x and y is characterized by the correlation coefficient r (also referred to as the Pearson's r, Pearson product-moment):

$$r = \frac{S_x S_y}{S_{xy}}. \qquad \text{(a5)}$$

It has a value between +1 and −1. A value of +1 implies that a linear equation describes the relationship between x and y perfectly, with all data points lying on a line for which y increases as x increases (total positive linear correlation). A value of −1 implies that all data points lie on a line for which y decreases as x increases (total

negative linear correlation). A value of 0 implies that there is no linear correlation between the variables. In the intermediate case, when x and y are related through nonlinear dependence, or when we have some spread of data, the Pearson's r has the intermediate value: $0 < |r| < 1$ (See Figure a3). Thus, $|r|$ is the indicator of how the relationship between x and y is close to the linear one.

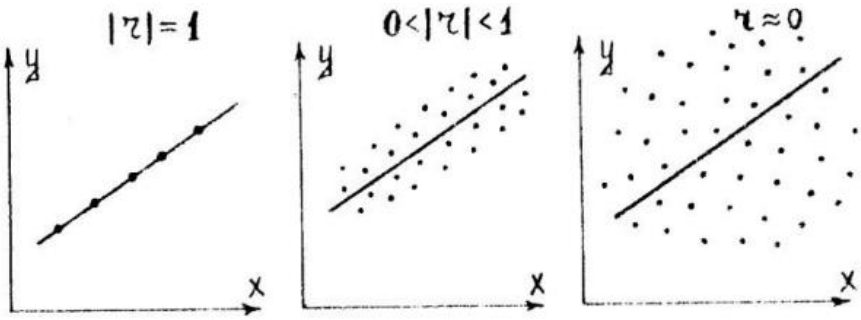

Figure a3.

Let us determine which value of $|r|$ should be considered sufficient for statistical confirmation of existence of the linear correlation between x and y. Testing using the Student's t-distribution can be used for it. The sampling distribution of a certain function of Pearson's correlation coefficient follows the Student's t-distribution with degrees of freedom $n - 2$. Specifically, the variable $R = r\frac{\sqrt{n-2}}{\sqrt{1-r^2}}$ has a Student's t-distribution in the null case. At a given confidence level α (usually taken as 95%) the value R lies within the range $R \pm t_{\alpha,n-2}$. We are interested in the value $R = 0$ (which corresponds to $r = 0$). It lies within this interval if the condition $|R| \leq t_{\alpha,n-2}$ is fulfilled.

Then, if the condition $|R| > t_{\alpha,n-2}$ is fulfilled, it can be stated that x and y have linear correlation with confidence level of 0.95 (or 95%). To simplify the testing, it is convenient to represent R by means of r_n, and condition for the linear correlation now is:

$$|r| > r_n, \text{ where } r_n = \frac{\tau}{\sqrt{1+\tau^2}}, \ \tau = \frac{t_{0.95,n-2}}{\sqrt{n-2}}. \qquad \text{(a6)}$$

List of the References

1. Physics for Scientists and Engineers with Modern Physics, Eighth Edition / Raymond A. Serway and John W. Jewett, Jr./ 2010 Cengage Learning Inc.
2. Irodov I.E. General physics. Physics of macrosystems. – M.:FIZMATLIT, 2001. –200p.
3. Kucheruk I. M., Horbachuck I.T., Lutsy P.P. General course of physics. Vol. 1. Mechanics. Molecular physics. K.: Technika, 1999. –536p.
4. Savelyev I.W. Course of general physics. Vol. 1. Mechanics. Molecular physics. –M.: Nauka,1982.
5. Syvukhin D.W. General course of physics. Mechanics. Molecular physics.-M.:Nauka,1979.